Evaluating the Energy/Exergy Efficiency of Utilizing Cold Energy from LNG Regasification for Cooling and Power Generation

Hien Phuoc Huynh
Ho Chi Minh City University of Technology (HCMUT), Vietnam

https://doi.org/10.5109/7411066

出版情報：Evergreen. 13 (1), pp.355-363, 2026-03. 九州大学グリーンテクノロジー研究教育センター
バージョン：

Evaluating the Energy/Exergy Efficiency of Utilizing Cold Energy from LNG Regasification for Cooling and Power Generation

Hien Phuoc HUYNH[1,2,*]

[1]Ho Chi Minh City University of Technology (HCMUT),
268 Ly Thuong Kiet Street, Dien Hong Ward, Ho Chi Minh City, Vietnam
[2]Vietnam National University Ho Chi Minh City, Linh Xuan Ward, Ho Chi Minh City, Vietnam

*Author to whom correspondence should be addressed:
E-mail: hphien@hcmut.edu.vn

(Received February 20, 2025; Revised August 04, 2025; Accepted August 24, 2025)

Abstract: LNG (liquefied natural gas), stored at temperatures below -162°C, requires significant energy for production and must be re-gasified before consumer distribution. Traditional regasification methods waste LNG's valuable cold energy. This study proposes an integrated system that harnesses LNG cold energy for both power generation and refrigeration. An Organic Rankine Cycle (ORC) with propane as the working fluid uses part of the LNG cold energy as a heat sink, while the remainder supports the refrigeration demand of cold storage via a CO_2 cycle. Thermal and exergy efficiencies, along with other performance indicators, are analyzed using the Engineering Equation Solver (EES) software. For an LNG terminal with a capacity of 3 million tons per year (MPTA), the proposed system can generate up to 11.762 MW of electricity and directly supply 12 MW of refrigeration at optimum exergy efficiency point. The maximum greenhouse gas (GHG) reduction is estimated at 53900.2 tons of CO_2 annually.

Keywords: Cold energy; Cold storage; LNG regasification; Organic Rankine Cycle (ORC); Power generation

1. Introduction

To achieve carbon neutrality, coal-fired power plants must be replaced with energy sources emitting little or no greenhouse gases (GHGs). However, these renewable sources alone are neither stable nor sufficient to meet growing energy demands. While the infrastructure and technology for renewable energy systems are still developing, natural gas (NG) presents a promising transitional solution due to its lower GHG emissions and reduced environmental impact compared to coal. NG combustion produces roughly 50% less GHGs, 80% less NO_x, and negligible amounts of SO_2 and particulate matter[1)]. NG can be imported via pipelines or in liquefied form by ship. The latter option diversifies supply but incurs high costs due to an energy-intensive liquefaction process, around 805 kWh of electricity/ton of LNG[2)]. Before distribution, LNG must be re-gasified using heat from air, seawater, or fuel combustion – a process that not only requires energy but also impacts local ecosystems.

At the temperature of -162°C, LNG cold energy offers various applications, including power generation when acting as a heat sink in the Organic Rankine Cycle (ORC), providing refrigeration for cold storage, improving the efficiency of combined vapor-gas power cycles, enhancing air separation and distillation processes or seawater desalination[3)]. The utilization of LNG cold energy not only provides energy benefits but also contributes to eliminating environmental impacts, such as reducing the amount of seawater used directly in the regasification process and cutting greenhouse gas emissions generated from fossil fuel combustion for power generation. Furthermore, it enhances the overall economic efficiency of LNG utilization.

Collecting LNG cold energy from regasification for power generation is one of the most prominent and attractive applications. Tatsuo Mohri et al[4)] were among the first to study the use of both LNG cold energy and LNG pressure for power generation through a cycle combining the ORC and direct expansion (DEX) process. With the LNG regasification rate of 130 t/h, the system could produce up to 6000 kW of power. The working fluids used in ORCs must not only have good thermodynamic and heat transfer properties but also be suitable for the extremely low temperatures of LNG. According to Haoshui Yu et al., propane (R290) is a suitable working fluid for this type of ORC[5)]. The efficiency of this cycle can be further

Cite: H. Huynh, "Evaluating the energy/exergy efficiency of utilizing cold energy from LNG regasification for cooling and power generation". Evergreen, 13 (01) 355-363 (2026). https://doi.org/10.5109/7411066.

improved by applying low-grade heat sources, such as the latent heat from steam turbines or the sensible heat exhaust from recovery boilers to the ORC[6]. Additionally, the impact on marine ecosystems can be mitigated by eliminating the seawater flow used for condenser cooling[7]. Further advancements in power generation efficiency from LNG cold energy can be achieved through innovative configurations, such as multi-stage LNG expansion or novel ORC arrangements. In addition to single-stage ORCs, parallel and cascade two-stage Rankine cycles have shown potential.[8,9] Multi-stage expansion processes further enhance efficiency and can match the performance of combined ORC and DEX cycle, but with simpler structures that eliminate the need for additional working fluids[10,11]. Another approach involves using LNG as a heat sink for closed Brayton cycles, of which Helium, Nitrogen or CO_2 is suggested as the working fluids due to working under extremely low temperatures[12,13].

LNG cold energy can also be used to improve the efficiency of combined cycle power plants (CCPP)[14]. This approach is particularly effective when re-gasified LNG is used as the power plant's fuel. Cooling the inlet air of the gas turbine in the combined gas turbine-steam cycle can increase the power output from the gas turbine by 12% during Korea's dry season[15]. LNG can also be used to lower the cooling water temperature in the steam condenser, thereby improving the efficiency of the steam turbine cycle and reducing the impact on the marine environment due to cooler water leaving the condenser[16]. Compared with the basic combined gas turbine-steam cycle, using LNG cold energy to cool the inlet air, intercool the gas turbine cycle, and directly cool the steam after the turbine in the steam turbine cycle can increase the overall efficiency by 2.8%[17]. In addition, to increase application flexibility, LNG can cool CO_2, from which CO2 acts as an intermediate coolant that can serve both gas turbine cycle inlet gas cooling and other civil refrigeration applications[18].

Using LNG cold energy directly for refrigeration - such as cooling, cold storage, or gas separation applications - is a highly feasible solution[19]. The cold from LNG regasification can meet the huge cooling demands of data centers. For example, the 29.82 MW of cold energy available from regasification is sufficient to support 3519 server racks and reduce CO_2 emissions by 34772 tons per year[20]. Moreover, since the regasification temperatures vary from -162°C to approximately 0°C, this cold energy can be deployed across multiple temperature levels to enhance the efficiency of various refrigeration processes[21]. Fadhel Ayachi's group[22] demonstrated that directly utilizing LNG's cold energy to cool data centers and liquefy air for buses or refrigerated trucks offers an optimal balance of economic and environmental advantages. In a similar vein, a study on the agro-food sector in Sicily revealed a payback period of only 1.68 years with a CO_2 reduction of 2200 tons, further underscoring the benefits of this approach[23]. When the cooling demand is insufficient to fully utilize the cold energy from LNG regasification, integrating a cold storage system can enhance system stability, reliability, and overall cooling efficiency[24].

The cold energy utilization options discussed above are generally economically viable[20,24-26]. However, project feasibility ultimately hinges on striking a balance between investment costs and energy benefits. Research by Arnab Dutta's group[25] indicates that while complex cold energy configurations can achieve higher energy efficiency, they often result in lower economic indices compared to simpler, less costly alternatives.

To achieve the goal of increasing gas-fired power generation capacity demonstrated in the Eighth National Power Development Plan[27], Vietnam needs to develop LNG projects and corresponding LNG import infrastructure at an appropriate scale using modern technology. This presents both challenges and opportunities, as the country urgently requires infrastructure to facilitate LNG imports and usage. Importantly, new LNG projects offer the potential to integrate advanced technologies that enhance energy efficiency and environmental performance. Countries such as Japan, Korea, China, France, and India have implemented projects to utilize the cold energy of LNG[28]. Vietnam can learn from these examples and adopt suitable technologies for future LNG terminals. Given Vietnam's long coastline and its strong seafood industry, there is substantial demand for refrigeration in freezing and cold storage facilities. This presents an ideal opportunity to directly utilize the cold energy from LNG via a CO_2 cycle, as described in ref[2,28], thereby eliminating the need for conventional vapor-compression refrigeration systems and thereby reducing electricity consumption. To maximize the use of this cold energy, it can also act as a heat sink in the ORC that uses low-grade seawater heat to generate electricity. This configuration allows cold storage facilities to operate without compressor power, while the ORC generates electricity without fossil fuel combustion – contributing to a reduction in GHG emissions. In this study, an LNG cold energy recovery cycle (LCERC) for both refrigeration and electricity generation is proposed. Since the useful output energy in this LCERC is derived from the cold energy of LNG, exergy efficiency is considered alongside thermal efficiency to provide a more complete evaluation of system performance. Furthermore, the associated reduction in GHG emissions is quantified to highlight the environmental benefits of the proposed cycle. The thermodynamic properties and processes of the working fluids within the LCERC are modeled and analyzed using the Engineering Equation Solver (EES) software.

2. Principal diagram, operating parameters and mathematical models

2.1. Principal diagram and operating parameters

Figure 1 illustrates the principal diagram of the LCERC for simultaneous electricity generation and refrigeration. The imported LNG, typically at the pressure of 0.12 MPa and the temperature of -162°C[2)], is pressurized by pump P1 before passing through heat exchangers HE1, HE2, HE3, and HE4 during the regasification process. The LNG cold energy is recovered at the heat exchangers HE1, HE2 and HE3. At heat exchanger HE1, the LNG cold energy is transferred to the cold storage facilities through CO_2 cycle. In this cycle, CO_2 saturated vapor is condensed into liquid at -50°C by the LNG flow and then pumped to the cold storage to serve various demands. Here, liquid CO_2 cools the air to -40°C in Zone 1 (freezing) and -25°C in Zone 2 (cold storage). For air conditioning and chilled water needed in Zone 3, liquid CO_2 cools the glycol solution to 5°C

After HE1, the LNG continues to re-gasify and serves as a heat sink for the ORC at HE2. Propane works as the fluid of the ORC. Propane liquid after pump P2 evaporates in the HE5 by the heat from the surface seawater. Propane vapor then expands in the turbine T2 and generates electricity. Due to the low temperature of LNG, propane exiting turbine T2 is condensed into liquid at significantly low temperature. Seawater is supplied to the heat exchangers by the seawater pump (SWP).

Besides reusing cold energy, LNG pressure energy is also exploited through the expansion process of LNG through turbine T1. Before entering the turbine T1, LNG is heated in HE3 to sufficient temperature by surface seawater. LNG leaving turbine T1 flows in HE4 to increase temperature to t_{L7} that is suitable for supplying to the customers. In this study, the LNG regasification station is assumed to have a capacity of 3 MTPA, corresponding to Phase Two of the Thi Vai LNG terminal project in southern Vietnam. The

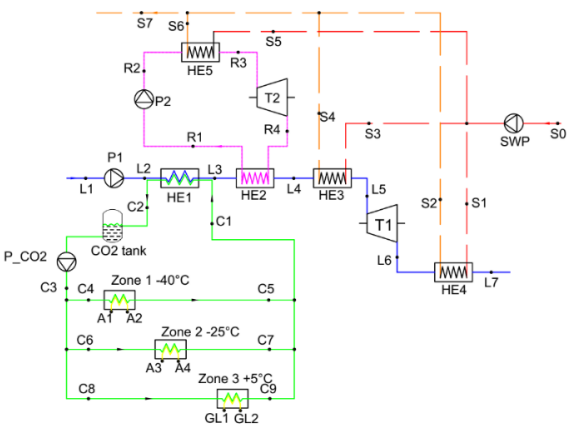

Fig. 1: Principal diagram of LCERC for power generation and refrigeration supply

Table 1: LCERC operation parameters

Parameter	Symbol	Value
LNG regasification capacity, MTPA	G_L	3
LNG Input pressure, MPa	p_{L1}	0.12
LNG Input temperature, °C	t_{L1}	-162
LNG pressure at outlet of pump P1, MPa	p_{L2}	6 to 14.5
LNG pressure at output of system, MPa	p_{L7}	3
LNG output temperature, °C	t_{L7}	0
Changing temperature of seawater through heat exchanger, °C	ΔT_{wa}	7
Seawater temperature at inlet of heat exchanger, °C	t_{S0}	30
Seawater pressure at the, MPa	p_{S1}	0.3
CO_2 condensation temperature, °C	t_{C1}	-50
Pump isentropic efficiency	η_P	0.9
Turbin isentropic efficiency	η_T	0.85
LNG pressure loss through heat exchanger, %	Δp	3

Table 2: Parameters of cold storage with cooling load corresponding to various temperature applications

Target temperature at different zones	Refrigeration demand	
	Case 1 Cold storage 6 MW	Case 2 Cold storage 12 MW
Zone 1: temperature at -40°C	1.2 MW	2.4 MW
Zone 2: temperature at -25°C	0.75 MW	1.5 MW
Zone 3: temperature at 5°C	4.05 MW	8.1 MW

terminal is located offshore, where the surface seawater temperature typically ranges from 29°C to 31°C[29)]. The cycle's parameters are detailed in Table 1 in which some main are selected according to ref[2,10)]. According to 2020 GCCA Global Cold Storage Capacity Report[30)], average size of refrigerated warehouse in Vietnam is around 53542 m^3 Based on this, the amount of cold energy directly extracted from the LCERC for freezing and cold storage applications is 6 MW and 12 MW, respectively. Table 2 presents the refrigeration demands and the corresponding target temperatures for the three zones in the freezing and cold storage.

2.2. Mathematical model

The processes inside the equipment and the stage of working fluids in the LCERC are modelled with the Engineering Equation Solver (EES) software The convergence criteria in the EES model are set such that the relative residuals are less than 10^{-6} and the change in variables does not exceed 10^{-9}. The following indicators are used to evaluate the LCERC performance.

The equivalent total power receiving from LCERC

$$W_{net,eq} = W_{net} + W_{cold,eq} = W_{net} + Q_{cold}/EER \quad (1)$$

Where:

- **W_{net}:** the net power generated from the cycle

$$W_{net} = W_{T1} + W_{T2} - (W_{P1} + W_{P2} + W_{sw}) \quad (2)$$

W_{T1}, W_{T2} are the power generated from turbines; W_{P1}, W_{P2}, W_{sw} are the power consumed by LNG pump; ORC pump and seawater pump.

- **Q_{cold}:** the LNG cold energy used directly for cold storage facilities

$$Q_{cold} = Q_{HE1} = G_L*(h_{L3} - h_{L2}) \quad (3)$$

- **$W_{cold,eq}$:** equivalent power saved by not operating the refrigeration compressor due to using LNG cold energy as refrigeration supply to cold storage facilities

$$W_{cold,eq} = Q_{cold}/EER \quad (4)$$

EER: energy efficiency ratio of refrigeration system. Within the operating temperature range from -40°C to 5°C, the EER typically varies between 1.2 to 4[31]. From the refrigeration demand in Table 2, an average EER value of 3.128 is adopted in this study.

LCERC total thermal efficiency η_{total}

$$\eta_{total} = \frac{W_{net,eq}}{\sum_1^5 Q_{HEi}} = \frac{W_{net} + \frac{Q_{cold}}{EER}}{Q_{HE1}+Q_{HE2}+Q_{HE3}+Q_{HE4}+Q_{HE5}} \quad (5)$$

Q_{HE1}, Q_{HE2}, Q_{HE3}, Q_{HE4} are the heat absorbed by LNG in HE1, HE2, HE3, HE4 while Q_{HE5} is the heat seawater transfers to propane in ORC

Heat from the surface seawater is a free source energy, to evaluate the performance of the LCERC more accurately and comprehensively, **exergy efficiency $\eta_{Ex,TOTAL}$** is calculated as follows

$$\eta_{Ex,TOTAL} = \frac{W_{T1}+W_{T2}+\Delta Ex_{A12}+\Delta Ex_{A34}+\Delta Ex_{GL12}}{(W_{P1}+W_{P2}+W_{SW})+G_L(ex_{L7}-ex_{L1})} \quad (6)$$

Where:

ΔEx_{A12} changing exergy of air through the CO_2 cooling coil to maintain the freezing zone at -40°C

ΔEx_{A34} changing exergy of air through the CO2 cooling coil to maintain the cold storage zone at -25°C

ΔEx_{GL12} changing exergy of glycol solution cold by CO_2 (glycol concentration is 30%)

ex_{L1}, ex_{L7} are the exergy of LNG at regasification station inlet and outlet, respectively.

ΔEx_{A12}, ΔEx_{A34}, ΔEx_{GL12} can be determined by following equation

$$\Delta Ex_{fi,i+1} = G_f(ex_{f,i+1} - ex_{f,i}) \quad (7)$$

$$ex_{f,i} = (h_{f,i} - h_{f,o}) - T_o(s_{f,i} - s_{f,o}) \quad (8)$$

Table 3: Validation EES model in the present paper

	Present paper	Reference[2)]
G_L, ton/h	150	150
Refrigeration capacity, MW	21	21
Cold recovery ratio, [-]	0.6375	0.64
W_{net}, kW	3514	3358
$\eta_{Ex,TOTAL}$*, %	41.08	40.3

$$ex_{f,i+1} = (h_{f,i+1} - h_{f,o}) - T_o(s_{f,i+1} - s_{f,o}) \quad (9)$$

The dead state is defined at a pressure of 100 kPa and a temperature of 30°C. The composition of LNG is assumed to be 100% methane and ignore the pressure loss of working fluid in pipeline.

GHG emission reduction:

Within the proposed LCERC, GHG emission can be reduced by saving grid electricity for freezing and cold storage, and by generating electricity from the ORC and the DEX without fossil fuel combustion. The total reduction in GHG emissions is calculated as:

$$GHG_R = \left(\frac{Q_{cold}}{EER} * EF_1 + W_{net} * EF_2\right) * t \quad (10)$$

EF_1 = 0.6593 tCO_2/MWh[32)] is the CO_2 emission factor for grid electricity consumed by freezing and cold storage.

EF_2 = 0.334 tCO_2/MWh[33)] is the CO_2 emission factor for electricity generation via natural gas combustion.

t = 8760 hours is operating time.

To validate the EES model presented in this paper, parameters from a similar cycle described in reference[2)] were input into the model to generate results for comparison. Table 3 demonstrates the comparison results. Although there is a slight discrepancy between the results from the EES model and those in reference[2)], this difference is acceptable, indicating that the EES model is reliable for the subsequent analysis.

3. Results and discussions

This section presents the performance indicators of the LCERC such as thermal efficiency, exergy efficiency, net power, equivalent total power, and GHG emission reduction, as calculated using the EES simulation model. The effects of key operating parameters – such as the temperature of LNG exiting heat exchanger HE2 (t_{L4}) and the regasification pressure of LNG after pump P1 (p_{L2}) – on system performance are also investigated. The LNG temperature t_{L4} directly affects the amount of LNG cold energy recovered and the ORC performance. Raising value of t_{L4} improves LNG cold energy recovery, reduces the seawater flowrate through heat exchanger HE3. However, a higher t_{L4} raises the condensation temperature of propane in the ORC, thus reducing the ORC thermal efficiency.

Meanwhile, the regasification pressure p_{L2} determines the balance between the power generated by the turbine T1 in the direct expansion process and the power consumed by the LNG pump P1.

Figures 2 and 3 show the variation of thermal efficiency and exergy efficiency for LNG pressure p_{l2} ranging from 6 to 14.5 MPa and LNG temperature t_{L4} varying from -130 to -10°C. Generally, the exergy efficiencies obtained in this study are lower than those reported in ref[2)], primarily because that study did not account for exergy destruction occurring due to the temperature differences between the CO_2 stream and the cooled media, including air and glycol solution at the heat exchangers in the freezing and cold storage. However, the exergy efficiency of the proposed LCERC is higher than the optimal single Rankine cycle and DEX in ref[8)], where LNG cold energy was only utilized for power generation. This suggests that directly using a portion of LNG cold energy at extremely low temperatures for freezing and cold storage through the CO_2 cycle results in lower exergy destruction due to temperature differences, compared to using LNG cold energy solely as a heat sink for the ORC.

Considering the effect of the regasification pressure p_{L2}, energy efficiency improves significantly as p_{L2} increases from 6 MPa to 10 MPa. Meanwhile, a noticeable improvement in exergy efficiency is observed primary when p_{L2} is below 11.5 MPa. Increasing p_{L2} can gain the power generated by turbine T1; however, when p_{L2} becomes too high, the additional power is no longer sufficient to compensate for the increased power consumption of the LNG pump P1.

As shown in Figures 2 and 3, for each regasification pressure pL2, both thermal and exergy efficiencies vary significantly with the LNG temperature tL4, and there exists an optimal temperature at which each efficiency is maximized. Using the Min/max tool of EES with the Golden Section Search method, the optimal operating points of the LCERC for two cases – with refrigeration demands of 6 MW and 12 MW – are identified and summarized in Tables 4 and 5.

In both refrigeration demand cases, for each value of p_{L2}, the LNG temperature t_{L4} corresponding to the maximum exergy efficiency is consistently higher than that for maximum thermal efficiency. Moreover, the equivalent total power output $W_{NET,eq}$ and the total heat input $\sum Q_{HEi}$ to the heat exchangers at the thermal efficiency optimum are lower than those at the exergy efficiency optimum. This is consistent with the nature of thermal efficiency, as expressed in Eq. 5, which favors minimizing heat input to maximize performance. However, in the LCERC system, this heat is primarily derived from seawater – a free, low-grade energy source with no exergy value. The useful output energy in the proposed cycle is mainly obtained from LNG cold energy at cryogenic temperatures and the mechanical work input to pumps, as expressed in Eq. 6. Therefore, exergy efficiency provides a more meaningful assessment of cycle performance.

An interesting observation is that the operating point yielding the highest exergy efficiency $\eta_{Ex,TOTAL}$ does not coincide with one at the highest equivalent total power output $W_{NET,eq}$. For Case 1, the maximum $\eta_{Ex,TOTAL}$ of 29.47% is achieved at p_{L2} = 14.5 MPa, with $W_{NET,eq}$ = 14.54 MW. For Case 2, the maximum $\eta_{Ex,TOTAL}$ is 29.11%, occurring at p_{L2} = 13 MPa, with an $W_{NET,eq}$ = 15.598 MW. In contrast, the maximum $W_{NET,eq}$ in Case 1 is 15.798 MW, achieved at p_{L2} = 6 MPa with $\eta_{Ex,TOTAL}$ = 29.15%. For Case 2, it is 16.433 MW at p_{L2} = 6 MPa, with $\eta_{Ex,TOTAL}$ = 28.48%. These operating points with higher equivalent power output require greater heat input, resulting in higher flow rate of seawater. Consequently, the pumps consume more power – an exergy flow in the LCERC – thus which in turn reduces the exergy efficiency. Therefore, when exergy efficiency is used as the performance criterion in the LCERC, high-grade energy inputs such as pump power are better optimized. This also implies lower system operating costs and capital investment, due to reduced energy demand for circulation

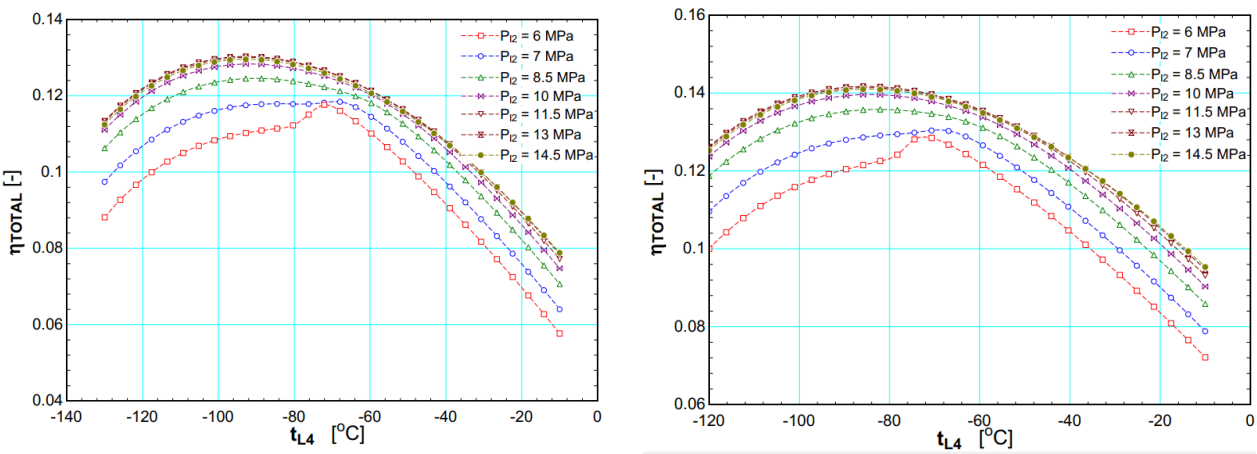

Case 1: Refrigeration supply capacity 6 MW **Case 2:** Refrigeration supply capacity 12 MW

Fig. 2: Influence of LNG pressure p_{L2} after pump P1 and temperature t_{L4} after the HE2 on total thermal efficiency

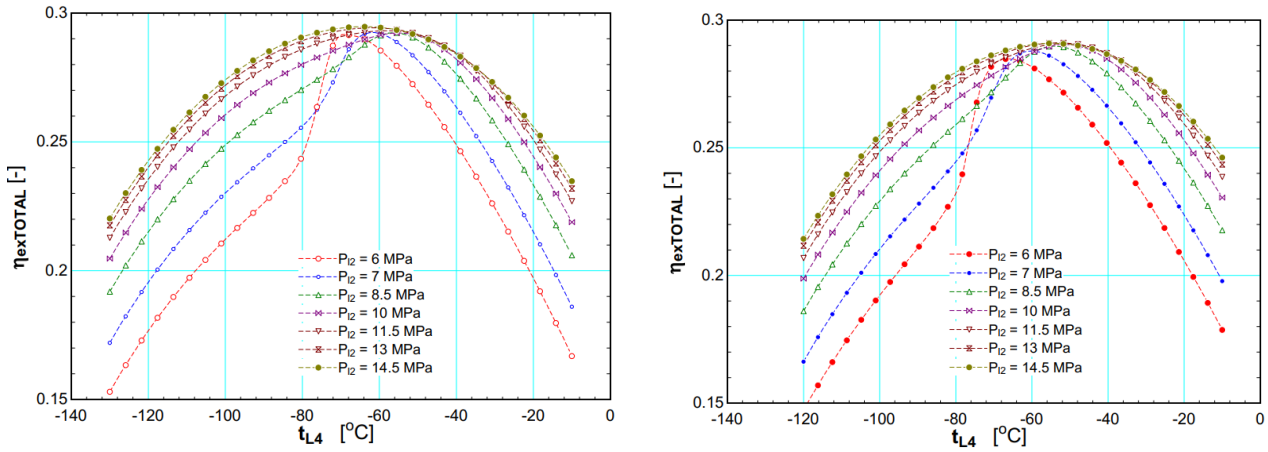

Case 1: Refrigeration supply capacity 6 MW **Case 2:** Refrigeration supply capacity 12 MW

Fig. 3: Influence of LNG pressure p_{L2} after pump P1 and temperature t_{L4} after the HE2 on total exergy efficiency

Table 4: Optimal values of t_{L4} and p_{L2} according to thermal and exergy efficiencies in Case 1 (Refrigeration demand of 6 MW)

	p_{L2}, MPa	6	7	8.5	10	11.5	13	14.5
	t_{L4}, °C	-72.54	-69.07	-90.09	-91.81	-92.53	-92.71	-92.57
	W_{NET}, MW	13.571	13.212	11.667	11.95	12.049	12.008	11.867
	$W_{NET,eq}$, MW	15.489	15.13	13.585	13.868	13.967	13.926	13.785
$\eta_{total,max}$	$\sum Q_{HEi}$, MW	131.709	127.679	109.116	108.09	107.438	106.876	106.448
	$\eta_{total,max}$, %	11.76	11.85	12.45	12.83	13	13.03	12.95
	$\eta_{ex,TOTAL}$, %	28.61	28.28	26.05	26.99	27.61	27.98	28.18
	GHG_R, ton/year	46376.9	45417.6	41289.4	42045.6	42310.1	42200.6	41823.8
	t_{L4}, °C	-67.64	-61.82	-56.27	-54.97	-58.06	-61.86	-64.08
	W_{NET}, MW	13.88	13.763	13.5	13.241	13.038	12.848	12.622
	$W_{NET,eq}$, MW	15.798	15.681	15.418	15.159	14.956	14.766	14.54
$\eta_{ex,total,max}$	$\sum Q_{HEi}$, MW	136.307	135.298	132.799	129.013	124.219	120.637	118.404
	η_{total}, %	11.59	11.59	11.61	11.75	12.04	12.24	12.28
	$\eta_{ex\ total,max}$ %	29.15	29.24	29.23	29.23	29.31	29.42	29.47
	GHG_R, ton/year	47202.5	46889.9	46187.2	45495.1	44952.7	44445	43841.2

Table 5: Optimal values of t_{L4} and p_{l2} according to thermal and exergy efficiencies in Case 2 (Refrigeration demand of 12 MW)

	p_{L2}, MPa	6	7	8.5	10	11.5	13	14.5
	t_{L4}, °C	-72.45	-69	-82.33	-84.36	-85.08	-85.21	-85
	W_{NET}, MW	12.189	11.9	10.498	10.684	10.747	10.689	10.542
	$W_{NET,eq}$, MW	16.025	15.736	14.334	14.52	14.583	14.525	14.378
$\eta_{total,max}$	$\sum Q_{HEi}$, MW	124.514	120.582	105.552	104.011	103.133	102.505	101.972
	$\eta_{total,max}$ %	12.87	13.05	13.58	13.96	14.14	14.17	14.1
	$\eta_{ex\ total}$ %	27.76	27.56	25.59	26.36	26.92	27.27	27.47
	GHG_R, Ton/year	52799.4	52027.2	48281	48778	48946.3	48791.4	48398.6
	t_{L4}, °C	-66.2	-60.22	-54.14	-51.34	-51.46	-52.99	-54.48
	W_{NET}, MW	12.597	12.601	12.455	12.237	12.004	11.762	11.495
	$W_{NET,eq}$, MW	16.433	16.437	16.291	16.073	15.84	15.598	15.331
$\eta_{ex,total,max}$	$\sum Q_{HEi}$, MW	130.111	129.222	127.273	124.404	121.101	118.077	115.706
	η_{total}, %	12.63	12.72	12.8	12.92	13.08	13.21	13.25
	$\eta_{ex\ total,max}$ %	28.48	28.79	28.98	29.04	29.08	29.11	29.09
	GHG_R, Ton/year	53889.5	53900.2	53510.1	52927.6	52305	51658.4	50945

and cooling.

To determine the environmental benefit of the proposed cycle, GHG reduction was evaluated. The maximum GHG reduction – 53900.2 tons of CO_2 – occurs under the condition of maximum $W_{net,eq}$ = 16.437 MW. The LCERC with refrigeration demand of 12 MW, (Case 2) has the higher reduction in GHG emissions compared with Case 1, as it saves more grid electricity for freezing and cold storage operation.

4. Conclusion

As Vietnam's energy demand continues to grow, LNG will contribute a significant proportion to the national energy supply. Given the current urgent needs, Vietnam must quickly build the infrastructure necessary for importing and distributing LNG. This challenge also presents an opportunity for Vietnam to implement advanced technologies to enhance LNG utilization efficiency. LNG, with its extremely low temperature, is a valuable energy source. If recovered, it can be used for various purposes. In this paper, the LCERC cycle is proposed to recover the LNG cold energy for both refrigeration and electricity generation. With the LNG regasification capacity at 3 MTPA, corresponding to the Thi Vai LNG terminal (Vietnam) Phase Two project, the equivalent net power output could reach 15.331 MW, comprising 12 MW refrigeration capacity plus 11.762 MW power generation when the LCERC operates at the optimal exergy efficiency point. This solution not only eliminates the need for mechanical compressor systems in freezing and cold storage facilities but also enables electricity generation from seawater without GHG emissions. The maximum amount of GHG can be reduced is around 53900.2 tons of CO_2. These results demonstrate the LCERC's technical viability and its practical implications for improving cold storage efficiency, reducing grid electricity consumption, and cutting operational costs. However, to transition this concept from research to industrial application, further works such as techno-economic assessment and life cycle environmental impact analysis are essential to evaluate system feasibility, investment return, and scalability under real-world conditions.

ACKNOWLEDGMENTS

We acknowledge Ho Chi Minh City University of Technology (HCMUT), VNU-HCM for supporting this study

ABBREVIATION

DEX	Direct expansion
GHGs	Greenhouse gases
HE	Heat exchanger
LCERC	LNG cold energy recovery cycle
LNG	Liquefied natural gas
MPTA	Million tons per annum
NG	Natural gas
ORC	Organic Rankine cycle
SWP	Seawater pump

References

1) J. Yuan, X. Ou, and G. Wan, “Establishing a framework to evaluate the effect of energy countermeasures tackling climate change and air pollution: The example of China,” *Sustainability*, 9(9), 1955 (2017). doi:10.3390/su9091955.

2) A. Atienza-Márquez, J.C. Bruno, A. Akisawa, and A. Coronas, “Performance analysis of a combined cold and power (CCP) system with exergy recovery from LNG-regasification,” *Energy*, 183, 448–461 (2019). doi:10.1016/j.energy.2019.06.136.

3) T. He, Z.R. Chong, J. Zheng, Y. Ju, and P. Linga, “LNG cold energy utilization: Prospects and challenges,” *Energy*, 170, 557–568 (2019). doi:10.1016/j.energy.2018.12.170.

4) T. Mohri, K. Kawaguchi, K. Ichihara, and O. Kita, “A power generating plant by LNG cold energy,” in *Proc. 9th Int. Cryog. Eng. Conf.*, Kobe, Japan (1982). doi:10.1016/B978-0-408-01252-2.50169-2.

5) H. Yu, D. Kim, and T. Gundersen, “A study of working fluids for Organic Rankine Cycles (ORCs) operating across and below ambient temperature to utilize liquefied natural gas (LNG) cold energy,” *Energy*, 167, 730–739 (2019). doi:10.1016/j.energy.2018.10.168.

6) Q. Wang, Y. Li, and J. Wang, “Analysis of power cycle based on cold energy of liquefied natural gas and low-grade heat source,” *Appl. Therm. Eng.*, 24, 539–548 (2004). doi:10.1016/j.applthermaleng.2003.09.003.

7) G. Oliveti, N. Arcuri, R. Bruno, and M. De Simone, “A rational thermodynamic use of liquefied natural gas in a waste incinerator plant,” *Appl. Therm. Eng.*, 35, 134–144 (2012). doi:10.1016/j.applthermaleng.2011.10.025.

8) Z. Sun, F. Xu, S. Wang, J. Lai, and K. Lin, “Comparative study of Rankine cycle configurations utilizing LNG cold energy under different NG distribution pressures,” *Energy*, 139, 380–393 (2017). doi:10.1016/j.energy.2017.08.040.

9) Z. Sun, J. Lai, S. Wang, and T. Wang, “Thermodynamic optimization and comparative study of different ORC configurations utilizing the exergies of LNG and low grade heat of different temperatures,” *Energy*, 147, 688–700 (2018). doi:10.1016/j.energy.2018.01.049.

10) R. Ferreiro García, J. Carbia Carril, J. Romero

Gomez, and M. Romero Gomez, "Combined cascaded Rankine and direct expander based power units using LNG cold as heat sink in LNG regasification," *Energy*, 105, 16–24 (2016). doi:10.1016/j.energy.2015.12.062.

11) A. Franco and C. Casarosa, "Thermodynamic analysis of direct expansion configurations for electricity production by LNG cold energy recovery," *Appl. Therm. Eng.*, 78, 649–657 (2015). doi:10.1016/j.applthermaleng.2014.12.062.
12) C. Dispenza, G. Dispenza, V. La Rocca, and G. Panno, "Exergy recovery during LNG regasification: Electric energy production – Part one," *Appl. Therm. Eng.*, 29, 380–387 (2009). doi:10.1016/j.applthermaleng.2008.03.012.
13) M. Romero Gómez, R. Ferreiro Garcia, J. Romero Gómez, and J. Carbia Carril, "Thermodynamic analysis of a Brayton cycle and Rankine cycle arranged in series exploiting the cold exergy of LNG," *Energy*, 66, 927–937 (2014). doi:10.1016/j.energy.2014.01.095.
14) G. Yu, S. Jia, and B. Dai, "Review on recent liquefied natural gas cold energy utilization in power generation cycles," *Adv. Geo-Energy Res.*, 2, 86–102 (2018). doi:10.26804/ager.2018.01.07.
15) T.S. Kim and S.T. Ro, "Power augmentation of combined cycle power plants using cold energy of liquefied natural gas," *Energy*, 25, 841–856 (2000). doi:10.1016/S0360-5442(00)00029-4.
16) U. Desideri and C. Belli, "Assessment of LNG regasification systems with cogeneration," in *Proc. Turbo Expo*, Munich, Germany (2000). Available: https://hdl.handle.net/11568/628415.
17) X. Shi, B. Agnew, D. Che, and J. Gao, "Performance enhancement of conventional combined cycle power plant by inlet air cooling, inter-cooling and LNG cold energy utilization," *Appl. Therm. Eng.*, 30, 2003–2010 (2010). doi:10.1016/j.applthermaleng.2010.05.002.
18) G. Zhang, J. Zheng, Y. Yang, and W. Liu, "A novel LNG cryogenic energy utilization method for inlet air cooling to improve the performance of combined cycle," *Appl. Energy*, 179, 638–649 (2016). doi:10.1016/j.apenergy.2016.07.040.
19) B.B. Kanbur, L. Xiang, S. Dubey, F.H. Choo, and F. Duan, "Cold utilization systems of LNG: A review," *Renew. Sustain. Energy Rev.*, 79, 1171–1188 (2017). doi:10.1016/j.rser.2017.05.161.
20) M. Sermsuk, Y. Sukjai, M. Wiboonrat, and K. Kiatkittipong, "Utilising cold energy from liquefied natural gas (LNG) to reduce the electricity cost of data centres," *Energies*, 14, 6269 (2021). doi:10.3390/en14196269.
21) J. Lian, B. Xia, Y. Yin, G. Yang, Y. Yang, X. Gou, E. Wang, L. Liu, and J. Wu, "Research on high efficient utilization of LNG cold energy," in *Proc. ICCMCEE*, Hangzhou, China (2015). doi:10.2991/iccmcee-15.2015.52.
22) F. Ayachi, L. Yang, F. Dal Magro, A. Meneghetti, and A. Romagnoli, "Assessment of LNG cold energy utilization for road vehicles and data-centres cooling using liquid air," in *Proc. ICAE*, Hong Kong (2018). doi:10.1016/j.egypro.2019.01.656.
23) A. Messineo and G. Panno, "LNG cold energy use in agro-food industry: A case study in Sicily," *J. Nat. Gas Sci. Eng.*, 3, 356–363 (2011). doi:10.1016/j.jngse.2011.03.004.
24) Z.F. Huang, K.Y. Soh, Y.D. Wan, M.R. Islam, and K.J. Chua, "Assessment of an intermediate working medium and cold energy storage system for LNG cold energy utilization," *Energy*, 253, 124153 (2022). doi:10.1016/j.energy.2022.124153.
25) A. Dutta, I.A. Karimi, and S. Farooq, "Economic feasibility of power generation by recovering cold energy during LNG regasification," *ACS Sustain. Chem. Eng.*, 6(8), 10393–10403 (2018). doi:10.1021/acssuschemeng.8b01075.
26) D. Fioriti, A. Baccioli, G. Pasini, A. Bischi, F. Migliarini, D. Poli, and L. Ferrari, "LNG regasification and electricity production for port energy communities: Economic profitability and thermodynamic performance," *Energy Convers. Manage.*, 238, 114128 (2021). doi:10.1016/j.enconman.2021.114128.
27) Prime Minister of Vietnam, "Decision approving the National Power Development Plan for 2021–2030 period, with a vision to 2050 (PDP VIII)," Hanoi, Vietnam (2023). Available: https://en.baochinhphu.vn/decision-approving-national-power-development-plan-8-111230614195813455.htm.
28) J.O. Khor, F. Dal Magro, T. Gundersen, J.Y. Sze, and A. Romagnoli, "Recovery of cold energy from liquefied natural gas regasification: Applications beyond power cycles," *Energy Convers. Manage.*, 174, 336–355 (2018). doi:10.1016/j.enconman.2018.08.047.
29) N.N. Tuan, D.T.P. Thao, N.T.K. Anh, and T.T. Huong, "The trend of sea surface temperature distribution in the east sea from remote sensing data," in Proc. Natl. Conf. Geospatial Technol. Earth Sci. Environ. (NCGEE), Hanoi, Vietnam (2021) (in Vietnamese).
30) V. Salin, "2020 GCCA global cold storage capacity report," Global Cold Chain Alliance (2020). https://iifiir.org/en/fridoc/2020-global-cold-storage-capacity-report-144390.
31) American Society of Heating, Refrigerating and Air-Conditioning Engineers, "*ASHRAE Handbook—Refrigeration*," ASHRAE, Atlanta (2018).

32) Department of Climate Change, Ministry of Natural Resources and Environment (MONRE), "Official Dispatch No. 1726/BĐKH-PTCBT: Announcement of Vietnam grid emission factor for greenhouse gas inventory," Hanoi, Vietnam (2024) (in Vietnamese).
33) T. Schmitt, S. Leptinsky, M. Turner, A. Zoelle, C.W. White, S. Hughes, S. Homsy, M. Woods, H. Hoffman, T. Shultz, and R. James, "Cost and performance baseline for fossil energy plants volume 1: bituminous coal and natural gas to electricity," National Energy Technology Laboratory (2022). doi:10.2172/1893822.

Cite: H. Huynh, "Evaluating the energy/exergy efficiency of utilizing cold energy from LNG regasification for cooling and power generation". Evergreen, 13 (01) 355-363 (2026). https://doi.org/10.5109/7411066.