九州大学学術情報リポジトリ
Kyushu University Institutional Repository

Experimental Study on the Effect of Pitching Angle on Tandem NACA 0030 and NACA 4412 Airfoils

Tobing, Sheila
Master Program in Energy System Engineering, Faculty of Engineering, University of Indonesia

Timothy, Kenneth
Department of Mechanical Engineering, Atma Jaya Catholic University of Indonesia

Rainer L. Surjadi
Department of Mechanical Engineering, Atma Jaya Catholic University of Indonesia

A.I. Aria
Surface Engineering and Precision Centre, School of Aerospace, Transport, and Manufacturing, Cranfield University

他

https://doi.org/10.5109/7172313

出版情報：Evergreen. 11 (1), pp.501-507, 2024-03. 九州大学グリーンテクノロジー研究教育センター
バージョン：
権利関係：Creative Commons Attribution 4.0 International

Experimental Study on the Effect of Pitching Angle on Tandem NACA 0030 and NACA 4412 Airfoils

Sheila Tobing[1,2,*], Kenneth Timothy[3], Rainer L. Surjadi[3], A.I. Aria[4], Arka Soewono[3]

[1] Master Program in Energy System Engineering, Faculty of Engineering, University of Indonesia, Depok, Indonesia

[2] Tropical Renewable Energy Center, Faculty of Engineering, University of Indonesia, Depok, Indonesia

[3] Department of Mechanical Engineering, Atma Jaya Catholic University of Indonesia, Jakarta, Indonesia

[4] Surface Engineering and Precision Centre, School of Aerospace, Transport, and Manufacturing, Cranfield University, Cranfield MK43 0AL, U.K.

*Author to whom correspondence should be addressed:
E-mail: sheila.tobing@ui.ac.id

(Received October 30, 2023; Revised February 12, 2024; Accepted March 06, 2024).

Abstract: Inspired by insect flight, oscillatory motion with pitching and plunging has been studied, and tandem configurations have been explored to enhance propulsive efficiency. As a first step in analyzing an oscillating tandem airfoil configuration, tandem airfoils are modeled as stationary. The present study investigates the aerodynamic effects of pitching angles on a tandem airfoil system using two NACA airfoil profiles, NACA 0030 and NACA 4412. While numerical studies have examined wing profiles and pitching angles, experimental analyses are relatively scarce due to their cost and time intensiveness. This study aims to complement existing numerical data and provide new insights into the aerodynamic performance of tandem airfoils. Experimental investigations are conducted in a wind tunnel for pitching angle combinations of the front and rear airfoils of 5°-10°, 5°-15°, and 10°-15°. The findings indicate that increasing the pitching angle of the tandem foil oscillation system results in a higher drag coefficient (C_d) and lift coefficient (C_l). For the NACA 4412 profile, the maximum C_d and C_l values were obtained at a pitching angle of 10°-15°, with C_d = 1.553 and C_l = 2.0565. The NACA 0030 profile exhibits a decreasing trend in C_d with increasing pitching angle, reaching a maximum C_d = 0.883 at 5°-10°, while C_l increases with pitching angle, peaking at C_l = 0.619.

Keywords: Oscillating Tandem Airfoil; Experimental analyses; Wind tunnel; NACA 0030; NACA 4412

1. Introduction

The maximum practical potential of tidal current that is obtained from the measurement of 13 straits in Indonesia is around 1,5 GW[1)]. Among the straits, Larantuka Strait is planned to be the site for the first tidal current power plant with a capacity of 30 MW[2)]. Larantuka Strait has a current velocity of 3-4 m/s and an average kinetic power density of around 10 kW/m^2 [3)]. Currently, the future of the project in Larantuka is unclear and Indonesia's tidal energy potential remains untapped. Intensive research is needed to develop a turbine to harvest the energy from Indonesia's tidal current. In general, hydrokinetic turbines can be categorized into three: horizontal-axis hydrokinetic turbines, vertical-axis hydrokinetic turbines, and hydrokinetic turbines with oscillatory motion. Among these turbines, this paper focuses on the relatively new and more innovative, hydrokinetic turbines with oscillatory motion. The oscillating/flapping turbines are inspired by the flapping flight of nature's flyers like birds and insects.

The mechanism of wing flapping/oscillation motion has been studied over the past two decades. Of the many researchers in insect flight, several have successfully uncovered fundamental phenomena such as leading-edge vortex (LEV), spanwise flow, wing-wake interaction, and rapid wing rotation[4–8)]. Generally, the flapping/oscillatory motion is simplified into pitching, plunging, or combining both[9,10)]. However, as a first stage, it is common to model the flapping or oscillating system as stationary to reduce the case's complexity and focus on the aerodynamic performance of the airfoils/wings.

In addition to single wing/airfoil configuration, many insects have more than one pair of wings, for example dragonflies. This observation in nature has encouraged

researchers to study tandem wings[10–12]. One of the highlights of the tandem wing system is the number of wings that can be added into the tandem configuration can increase the propulsive efficiency of the system.

Using different foil profiles in a tandem foil configuration can produce different aerodynamic effects. In addition, the variable that most affects the magnitude of the aerodynamic forces is the pitching angle of the wing/foil. Many numerical studies have discussed the effects of wing profile and pitching angle. However, there are fewer experimental analyses than numerical studies, possibly due to the analysis's more expensive and time-consuming nature. Therefore, more experimental data are needed to complement the numerical studies or provide new insight.

2. Literature Review

Indonesia is one of the countries with the largest population in the world. Therefore, energy requirements are getting higher. Energy sources in Indonesia are still dominated by fossil fuels at 87.8%[13]. Renewable energy is the government's main focus for alternative energy sources that are environmentally friendly and sustainable[14]. Technology development from renewable energy sources has begun, for example, by utilizing solar[15–18], water current[19,20], wave[21,22], tidal[23,24], wind[25–28], biomass[29–32], geothermal[33,34], or a combination of the above[35,36].

Tidal energy is promising in its application because it provides a lot of energy due to tidal movements. The kinetic energy generated from tidal movements can be extracted through ocean currents. However, energy extraction requires an energy conversion machine to convert kinetic energy into electrical energy. Several types of water turbines can be generally divided into horizontal-axis hydrokinetic turbines, vertical-axis hydrokinetic turbines, and hydrokinetic turbines with oscillatory motion. The discussion of hydrokinetic turbines utilizing oscillatory motion is interesting because it can present a high energy extraction efficiency[37]. Apart from that, the advantage of this type of turbine is that it does not require deep water and strong currents[38].

Many turbines with oscillatory motion use the NACA wing profile type. NACA is a name created by NASA (National Advisory Committee for Aeronautics), which is a cross-sectional shape designed in such a way as to get a specific reaction of fluid movement around it. One of the series of NACA is the four-digit NACA foil. The first digit determines the maximum camber as a percentage of the chord. The second digit specifies the position of the maximum camber as one-tenth of the chord, measured from the airfoil's leading edge. The last two digits determine the maximum thickness of the foil as a percentage of the chord.

The first discovery of a hydrokinetic turbine utilizing oscillatory motion was the study of the Wingmill by McKinney and DeLaurier in 1981[39]. The study used a NACA 0014 foil with a chord length of 6.35 cm and a span of 34.29 cm. The resulting power extraction on the turbine is 16.8%, with a power of 90 W. Then, the Wingmill research was continued by Jones et al. in 2003 by applying a tandem configuration to the Wingmill turbine with a stagger/horizontal distance between foils of 2.54 cm[40]. The research was conducted numerically and experimentally. Through the numerical approach, this study concluded that using a tandem configuration can increase the turbine's efficiency. However, the experimental data were smaller than the numerical simulation results.

In 2005, The Engineering Business Ltd. created a large project called Stingray[41]. Using one NACA 0012 foil with a chord length of 3 m, Stingray produced an average power of 100 kW with a power extraction efficiency of 17.9%. Unfortunately, this research was discontinued due to funding issues.

Thomas Kinsey and Guy Dumas researched a turbine utilizing foil oscillation motion with a tandem configuration[37]. The foil used is a NACA 0015 profile with a chord length (c) of 0.24 m, a span of 1.68 m, and a stagger of 5.4-c. The pitching motion of the foil is regulated through a chain and sprocket mechanism that is directly connected to the plunging movement of the foil. The resulting power extraction efficiency is 40%, with an average power of 1.29 kW.

Research on hydrokinetic turbines with oscillatory motion is interesting because using a tandem configuration on the turbine can increase the power extraction efficiency of the turbine. The study by Koutsogiannakis E. P. et al. showed that a turbine with two foils resulted in an 11% increase in performance compared to an oscillating turbine with one foil; furthermore, the use of a three-foil configuration can produce a performance increase of 21%[42]. Wenhua Xu, et.al. shows that tandem hydrokinetic turbines can produce efficiencies of up to 36.3% at medium Strouhal numbers for good heaving and pitching movements[43]. Kinsey and Dumas also showed that the use of tandem hydrofoils has great potential because of their high efficiency, although the position of the two hydrofoils plays a high role in getting the maximum possible efficiency[44].

The current research aims at developing a tandem flapping/oscillating hydrokinetic turbine with a capacity of 1.2 kW. The turbine's purpose is to supply electricity for residential use in remote areas in Indonesia. Our previous works were mainly numerical studies, investigating various parameters such as pitching angle, stagger or horizontal distance between the front airfoil pivot and the rear airfoil pivot, and airfoil profile. The current research provides the experimental results. The development of the oscillating turbine is still in its early stages. However, this turbine will be among the first flapping/oscillating hydrokinetic turbines developed in Indonesia.

3. Research Objectives

The primary objective of this study is to experimentally investigate the effects of pitching angle on a stationary tandem airfoil configuration and to analyze the impact of using various NACA profiles. This study aims to provide information to help designers and engineers select the airfoil profile and the pitching angle combination of the tandem airfoils by analyzing the drag and lift forces of the system. This paper focuses on the Reynolds number (Re) of 55.000, a stagger of 1-c (one chord-length), two airfoils: NACA 0030 and NACA 4412, and three combinations of pitching angle of the front and rear airfoils of 5°-10°, 5°-15°, and 10°-15°.

4. Materials and Methods

This research is conducted experimentally using a wind tunnel to study the effect of airfoil and pitching angle on tandem airfoils under stationary conditions. Wind tunnel experiments are conducted on two airfoils, NACA 0030 and NACA 4412, with a Reynolds number (Re) of 55,000. The length of the airfoil chord (c) is 0.2 m, with the pivot located at 25% of the chord, measured from the leading edge (LE). The stagger or horizontal distance between the front airfoil pivot and the rear airfoil pivot used is 1-c, and the combinations of pitching angle used are 5°-10°, 5°-15°, and 10°-15° for front and rear foils, respectively.

The x- and y-axis forces (F_x and F_y) were measured using two sunrise instrument (SRI) loadcell units connected to a data acquisition system (DA) and then processed using APROPOS, a data processing software. In the APROPOS process, only the zero-drift correction of the instrumentation system is used, otherwise known as the First and Second Zero Correction. Aerodynamic forces of 2D tandem foils in the x-axis direction represent the drag (F_x), and the y-axis direction represents the lift (F_y).

As the first step in conducting the present research, a test model is designed and shown in Fig. 1. In Fig. 1, number 1 is the tandem airfoil, number 2 is the support structure of the airfoil, and number 3 is the test section in Educational Low-Speed Wind Tunnel (ELST) at Pusat Penelitian Ilmu Pengetahuan dan Teknologi (Puspiptek) Badan Riset dan Inovasi Nasional in Serpong.

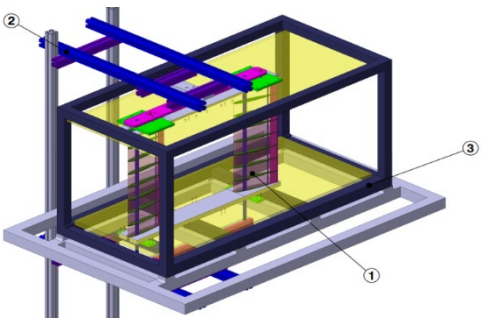

Fig. 1: Design of tandem foil test rig[45)]

After installing the structure support and loadcell, some special preparations are needed, namely the following two pre-test stages. First, calibration of the loadcell, known as check load, to ensure that the loadcell is working accurately on the measured force components (F_x and F_y) and to verify the calibration matrix of each loadcell. The calibration is carried out in 2 stages by checking the data measured on the loadcell, namely calibration on each loadcell (one by one) and calibration with loadcell units connected, where a shaft connects the loadcells.

Table 1: Standard deviation on each foil[45)].

Airfoil Type	Aerodynamic Force	Standard Deviation	
NACA 0030	Drag Force	0.120 N	0.015 %
	Lift Force	0.790 N	0.099 %
NACA 4412	Drag Force	0.128 N	0.016 %
	Lift Force	0.426 N	0.053 %

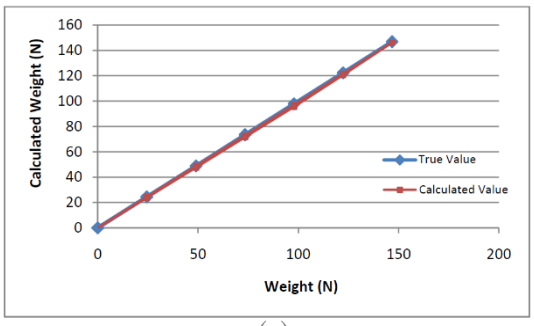

(a)

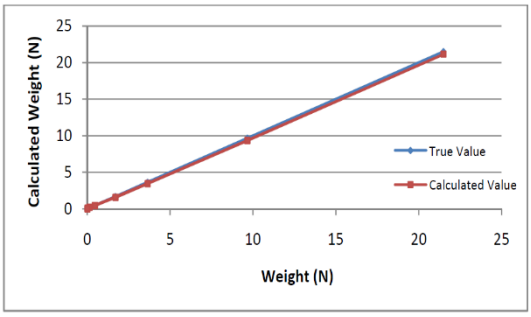

(b)

Fig. 2: Check load results on the (a) y-axis; (b) x-axis[45)]

Based on Table 1 and Fig. 2, it is known that the maximum standard deviation of the measurement results is smaller than the limit of the hysteresis and linearity repeatability criteria of the measuring instrument, which is 0.5% or 4 N for F_x and F_y of the full scale; therefore, this calibration process can be declared as valid.

Second, calibration of the wind tunnel to ensure that the wind speed experienced by the model is the expected speed, which is determined by extrapolating the wind speed measurement at the contraction section (nozzle) of the wind tunnel. Two correction methods are used in this calibration: First Zero and Second Zero. First Zero is the initial condition of the Data Acquisition system before the

test model is given a wind load so that when measurements are taken, the loadcell reads the actual aerodynamic forces and moments. The Second Zero is the final condition of the Data Acquisition system when the test is completed, and the wind load that hits the model is no longer present.

Second, calibration of the wind tunnel to ensure that the wind speed experienced by the model is the expected speed, which is determined by extrapolating the wind speed measurement at the contraction section (nozzle) of the wind tunnel. Two correction methods are used in this calibration: First Zero and Second Zero. First Zero is the initial condition of the Data Acquisition system before the test model is given a wind load so that when measurements are taken, the loadcell reads the actual aerodynamic forces and moments. The Second Zero is the final condition of the Data Acquisition system when the test is completed, and the wind load that hits the model is no longer present.

5. Results

This experimental study investigates the influence of pitching angle on tandem NACA 0030 and NACA 4412 airfoils, where the aerodynamic forces in this study are considered two-dimensional. With the current Reynolds number (Re) regime (55,000), the external flow is assumed to be laminar. The fluid flow used has a density (ρ) of 1.225 $\mathrm{kg/m^3}$, dynamic viscosity (μ) of 1.07894 × 10^{-5} kg/ms, velocity (U_{ref}) 4.07 m/s, the foil's chord length (c) is 0.2 m, and the swept area of the foil (S) is 0.1 m^2. The equation for the Reynolds number can be seen in Eq. 1.

$$\mathrm{Re} = \frac{\rho U_{ref} c}{\mu} \tag{1}$$

The results of this study are presented as a data set in tabular form of two variables: drag force and lift coefficients. The drag and lift coefficients presented here are the total amount of the front and the rear airfoils. From the force data that has been measured, it is necessary to process the data so that the data are obtained in the form of coefficient of drag (C_d) and coefficient of lift (C_l) for relevant comparison with other published data.

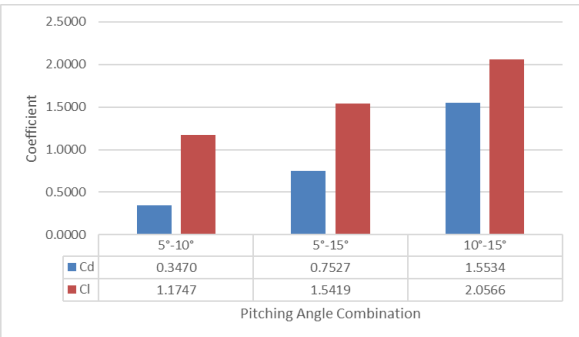

Fig. 3: Coefficient of lift and drag with different pitching angle combinations on NACA 4412.

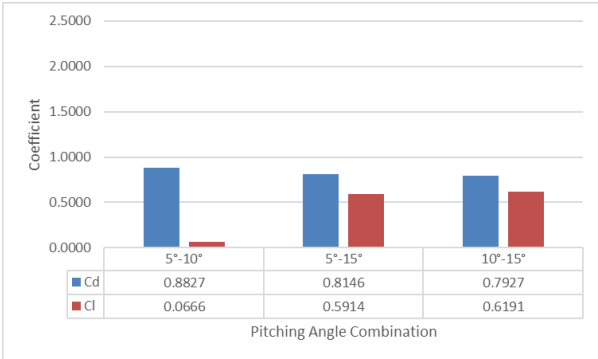

Fig. 4: Coefficient of lift and drag with different pitch angle combinations on NACA 0030.

6. Discussion of Results

From the results that have been produced, it can be seen that the C_d and C_l trends of NACA 4412 are similar to the results of experimental and theoretical studies conducted by Osama E. A. and Ahmed F. A. G. (2000) at the Reynolds number of 220.000[46]. In general, there is an increase in C_d and C_l as the pitching angle increases. Both studies were conducted on NACA 4412 with 1-c stagger and pitching angle variations from 5° to 15° degrees. The study of Osama and Ahmed only uses the same angle for the front and rear foils. For example, both front and rear foils are set at 5° or 10°, unlike the current study. These differences in Reynolds number and pitching angle variations make the C_d and C_l values different from the two studies. Despite the difference in Reynolds number and pitching angle variations, this earlier study provides valuable information on the effects of pitching angle on the lift and drag of tandem foils with 1-c stagger.

The results of the study can be seen in Fig. 3 and Fig. 4. Each graph represents the drag and lift coefficients of each NACA profile at different pitching angles (5°-10°, 5°-15°, and 10°-15°). Figure 3 is the result of the test using NACA 4412. It can be seen that C_d and C_l will continue to increase as the pitching angle of the front and rear airfoils increases. The minimum C_d and C_l are 0.347 and 1.175, respectively. They produce the maximum C_d and C_l at 1.553 and 2.0565.

Since the stagger between the two airfoils is 1-c, the rear airfoil experiences a significant effect due to the wake of the front airfoil. The thickness and camber of the foil might cause beneficial effects, such as the high C_l of NACA 4412 compared to NACA 0030. However, the test using NACA 0030 gives a different trend. The C_d decreases as the pitching angle increases, with a maximum value of 0.883 and a maximum value of 0.793. As mentioned in Osama and Ahmed's study[46], the decrease in C_d value with increased pitching angles can occur because the rear airfoil experiences negative drag (thrust) due to vortex shedding behind the front airfoil. At the same time, the C_l value increases from the pitching angle 5°-10° (C_l = 0.067) to 5°-15° (C_l = 0.591) and then rises slightly to C_l = 0.619 at 10°-15°.

If we compare the combined effect between NACA 0030 and 4412 profiles, we can see that NACA 4412 experiences a generally more significant C_l effect than NACA 0030 at any pitching angle combination. NACA 0030 produces more C_d than C_l, unlike NACA 4412, which is the opposite. However, NACA 4412 provides a larger C_d value than NACA 0030 in the 10°-15° pitching angle configuration.

These findings indicate that for a tandem airfoil with a stagger of 1-c at the Re of 55.000, NACA 4412 is the superior airfoil. For a high lift coefficient, NACA 4412 excels by generating lift, at minimum, 2.6 times the NACA 0030 at 5°-15°. Based on the lift-to-drag ratio (C_l/C_d), NACA 4412 also performs better than NACA 0030, which has a lift-to-drag ratio of less than one because the C_l is always less than C_d.

7. Conclusion

In general, the greater the pitching angle of the tandem airfoil configuration can produce higher C_d and C_l with increasing pitching angle of the front and rear airfoils of NACA 4412 with a maximum value of C_d = 1.553 and C_l = 2.0565 at the combination of pitching angle 10°-15°. Meanwhile, the C_d values of NACA 0030 are inversely proportional to the pitching angle, with a maximum of C_d = 0.883 at the pitching angle of 5°-10° and a C_l value that increases with increasing pitching angle with a maximum of C_l = 0.619 at 10°-15°.

Acknowledgments

The University of Indonesia funded this research under the PUTI Q2 2022, research scheme number NKB-1350/UN2.RST/HKP.05.00/2022.

Nomenclature

c	Chord Length (m)
C_l	Coefficient of Lift
C_d	Coefficient of Drag
ELST	Educational Low-Speed Wind Tunnel
F_x	Force in the x-axis direction (drag) (N)
F_y	Force in the y-axis direction (lift) (N)
LE	Leading Edge
LEV	Leading Edge Vortex
NACA	National Advisory Committee for Aeronautics
Re	Reynolds Number
U_{ref}	Reference velocity

Greek symbols

μ	Dynamic Viscosity (kg/ms)
ρ	Density (kg/m^3)

References

1) A. Kusuma, "OCEAN ENERGY OVERVIEW Feasibility Study of Ocean Energy Technology Implementation in Indonesia," World Maritime University, 2018.
2) "Tidal power plant larantuka, indonesia," (n.d.). https://www.tidalbridge.com/projects/tidal-power-plant-larantuka-indonesia-3/ (accessed February 12, 2024).
3) K. Orhan, and R. Mayerle, "Assessment of the tidal stream power potential and impacts of tidal current turbines in the strait of larantuka, indonesia," *Energy Procedia*, 125 230–239 (2017). doi:https://doi.org/10.1016/j.egypro.2017.08.199.
4) M.H. Dickinson, F.-O. Lehmann, and S.P. Sane, "Wing rotation and the aerodynamic basis of insect flight," *Science*, 284 (*5422*) 1954–1960 (1999). doi:10.1126/science.284.5422.1954.
5) S.P. Sane, and M.H. Dickinson, "The aerodynamic effects of wing rotation and a revised quasi-steady model of flapping flight," *Journal of Experimental Biology*, 205 (*8*) 1087–1096 (2002). doi:10.1242/jeb.205.8.1087.
6) J.M. Birch, and M.H. Dickinson, "The influence of wing–wake interactions on the production of aerodynamic forces in flapping flight," *Journal of Experimental Biology*, 206 (*13*) 2257–2272 (2003). doi:10.1242/jeb.00381.
7) J.M. Birch, and M.H. Dickinson, "Spanwise flow and the attachment of the leading-edge vortex on insect wings," *Nature*, 412 (*6848*) 729–733 (2001). doi:10.1038/35089071.
8) J.D. Eldredge, and A.R. Jones, "Leading-edge vortices: mechanics and modeling," *Annu. Rev. Fluid Mech.*, 51 (*1*) 75–104 (2019). doi:10.1146/annurev-fluid-010518-040334.
9) M. Ashraf, J. Young, and J. Lai, "Effect of Airfoil Thickness, Camber and Reynolds Number on Plunging Airfoil Propulsion," in: 47th AIAA Aerospace Sciences Meeting Including The New Horizons Forum and Aerospace Exposition, American Institute of Aeronautics and Astronautics, 2009. doi:10.2514/6.2009-1274.
10) Z.(陈喆) Chen, X.(李熊) Li, and L.(陈隆) Chen, "Enhanced performance of tandem plunging airfoils with an asymmetric pitching motion," *Physics of Fluids*, 34 (*1*) 011910 (2022). doi:10.1063/5.0079485.
11) J. Alba-Maestre, Koen Prud'homme van Reine, T. Sinnige, and S.G.P. Castro, "Preliminary propulsion and power system design of a tandem-wing long-range evtol aircraft," *Applied Sciences*, 11 (*23*) 11083 (2021). doi:10.3390/app112311083.
12) D. Bie, and D. Li, "Numerical analysis of the wing–wake interaction of tandem flapping wings in forward flight," *Aerospace Science and Technology*, 121 107389 (2022). doi:10.1016/j.ast.2022.107389.
13) S. Suharyati, N.I. Pratiwi, S.H. Pambudi, J.L. Wibowo, F.D. Arifin, A. Sauqi, Joel Theodorus Damanik, Daud Bonatua Tyson Pangaribuan, and Nanang Kristanto, "Indonesia Energy Outlook 2022," Dewan Energi Nasional, 2022.

14) Presiden Republik Indonesia, "Peraturan Pemerintah (PP) Nomor 79 Tahun 2014 tentang Kebijakan Energi Nasional," n.d. https://jdih.esdm.go.id/index.php/web/result/186/detail (accessed July 28, 2023).
15) P. Byrne, N. Putra, T. Maré, N. Abdallah, P. Lalanne, I. Alhamid, P. Estelle, A. Yatim, and A.-L. Tiffonnet, "Design of a solar ac system including a pcm storage for sustainable resorts in tropical region," *Evergreen*, 6 (*2*) 143–148 (2019). doi:10.5109/2321009.
16) K. Verma, O. Prakash, A. Paikra, and P. Tiwari, "Photovoltaic panel integration using phase change material (pcm)," (2023).
17) H.A. Jaffar, A.A. Ismaeel, and A.L. Shuraiji, "Review of hybrid photovoltaic-air updraft solar application: present and proposed state models," (2022).
18) N. Akter, A. Hossion, and N. Amin, "Fabrication of oxide passivated and antireflective thin film coated emitter layer in two steps for the application in photovoltaic," *Evergreen*,9(3). 654-661 (2022). doi.org/10.5109/4842524
19) A. Prasetyo, M.D. Septiyanto, E. Rovianto, S. Hadi, E.P. Budiana, D.D.D.P. Tjahjana, and I. Yaningsih, "Investigation of blade modifications to enhance savonius water turbine performance through vertical pipe flow," (2023).
20) D.M. Prabowoputra, A.R. Prabowo, I. Yaningsih, D.D.D.P. Tjahjana, F.B. Laksono, R. Adiputra, and H. Suryanto, "Effect of blade angle and number on the performance of bánki hydro-turbines: assessment using cfd and fda approaches," (2023).
21) M.A. Santoso, Y. Wijayanti, R.B. Prasetyo, O. Setyandito, A. Subandriya, A.T. Kurniawan, A. Sudaryanto, and B. Sutejo, "A mini review: wave energy converters technology, potential applications and current research in indonesia," (2023).
22) B. Guo, and J.V. Ringwood, "A review of wave energy technology from a research and commercial perspective," *IET Renewable Power Generation*, 15 (*14*) 3065–3090 (2021). doi:10.1049/rpg2.12302.
23) V. Khare, and M.A. Bhuiyan, "Tidal energy-path towards sustainable energy: a technical review," *Cleaner Energy Systems*, 3 100041 (2022). doi:10.1016/j.cles.2022.100041.
24) M.A. Almoghayer, D.K. Woolf, S. Kerr, and G. Davies, "Integration of tidal energy into an island energy system – a case study of orkney islands," *Energy*, 242 122547 (2022). doi:10.1016/j.energy.2021.122547.
25) B. Anggara, E.P. Budiana, C. Harsito, K. Enoki, K.-S. Kim, I. Yaningsih, and D.D.D.P. Tjahjana, "Performance improvement of h-darrieus wind turbine with high efficiency vortex structure attachment," (2023).
26) I. Yaningsih, D.D.D.P. Tjahjana, E.P. Budiana, M. Muqoffa, Z. Arifin, K. Enoki, and T. Miyazaki, "Numerical study on the effect of rectangular and triangular counter-rotating vortex generators on the h-rotor wind turbine performance," (2023).
27) M. Al-Ghriybah, "Performance analysis of a modified savonius rotor using a variable blade thickness," *Evergreen*, (2022). doi.org/10.5109/4842522
28) Y.D. Herlambang, Supriyo, B. Prasetiyo, A.S. Alfauzi, T. Prasetyo, Marliyati, and F. Arifin, "Experimental and simulation investigation on savonius turbine: influence of inlet-outlet ratio using a modified blade shaped to improve performance," *Evergreen*, 654-661 (2022). https://doi.org/10.5109/4842522 2.
29) N.B. Prihantini, N. Rakhmayanti, S. Handayani, W. Sjamsuridzal, and W. Wardhana, "Biomass production of indonesian indigenous leptolyngbya strain on npk fertilizer medium and its potential as a source of biofuel," (2020).
30) A. Rahman, and N.B. Prihantini, "Biomass production and synthesis of biodiesel from microalgae synechococcus hs-9 (cyanobacteria) cultivated using bubble column photobioreactors," (2020).
31) Y. Furutani, K. Norinaga, S. Kudo, J. Hayashi, and T. Watanabe, "Current situation and future scope of biomass gasification in japan," (2017).
32) E.R. Finalis, J. Prasetyo, N. Rahmawati, T.P. Rini, Z.D. Hastuti, N. Valentino, and S. Patisenda, "Development of bio-cstr design for bio-h2 from pome as renewable fuel," *Evergreen*, (2022). doi.org/10.5109/4794177
33) Y. Gunawan, N. Putra, E. Kusrini, I.I. Hakim, and M.D.H. Setiawan, "Study of heat pipe utilizing low-temperature geothermal energy and zeolite-a for tea leaves withering process," (2020).
34) B.T. Prasetyo, M. Oktaufik, and S. Himawan, "Design, construction and preliminary test operation of bppt-3mw condensing turbine geothermal power plant," (2019).
35) A.M. Hemeida, M.H. El-Ahmar, A.M. El-Sayed, H.M. Hasanien, S. Alkhalaf, M.F.C. Esmail, and T. Senjyu, "Optimum design of hybrid wind/pv energy system for remote area," *Ain Shams Engineering Journal*, 11 (*1*) 11–23 (2020). doi:10.1016/j.asej.2019.08.005.
36) Y. Wang, W. Shi, C. Michailides, L. Wan, H. Kim, and X. Li, "WEC shape effect on the motion response and power performance of a combined wind-wave energy converter," *Ocean Engineering*, 250 111038 (2022). doi:10.1016/j.oceaneng.2022.111038.
37) T. Kinsey, G. Dumas, G. Lalande, J. Ruel, A. Méhut, P. Viarouge, J. Lemay, and Y. Jean, "Prototype testing of a hydrokinetic turbine based on oscillating hydrofoils," *Renewable Energy*, 36 (*6*) 1710–1718 (2011). doi:10.1016/j.renene.2010.11.037.
38) Y. Wang, X. Sun, D. Huang, and Z. Zheng,

"Numerical investigation on energy extraction of flapping hydrofoils with different series foil shapes," *Energy*, 112 1153–1168 (2016). doi:10.1016/j.energy.2016.06.092.

39) W. McKinney, and J. DeLaurier, "Wingmill: an oscillating-wing windmill," *Journal of Energy*, 5 (*2*) 109–115 (1981). doi:10.2514/3.62510.
40) K.D. Jones, K. Lindsey, and M.F. Platzer, "An investigation of the fluid-structure interaction in an oscillating-wing micro-hydropower generator," *WIT Transactions on The Built Environment*, 71 (2003).
41) The Engineering Business Limited, "Stingray tidal energy device - phase 3," Crown Copyright, 2005.
42) P.E. Koutsogiannakis, E.S. Filippas, and K.A. Belibassakis, "A study of multi-component oscillating-foil hydrokinetic turbines with a gpu-accelerated boundary element method," *Journal of Marine Science and Engineering*, 7 (*12*) (2019). doi:10.3390/jmse7120424.
43) W. Xu, G. Xu, W. Duan, Z. Song, and J. Lei, "Experimental and numerical study of a hydrokinetic turbine based on tandem flapping hydrofoils," *Energy*, 174 375–385 (2019). doi:10.1016/j.energy.2019.02.188.
44) T. Kinsey, and G. Dumas, "Optimal tandem configuration for oscillating-foils hydrokinetic turbine," *Journal of Fluids Engineering*, 134 (*3*) (2012). doi:10.1115/1.4005423.
45) Basir, Fariduzzaman, Novan Risnawan, and Arif R.H., "Laporan Pengujian Sudu Turbin Hidrokinetik di ELST," 2023.
46) Osama E. Abdellatif and Ahmed F. Abdel Gawad, "An Experimental Investigation of Closely Interfering Airfoils at A Low Reynolds Number," in: Proceedings of The Engineering Systems Design and Analysis (ESDA) 2000, American Society of Mechanical Engineers, Montreux, Switzerland, 2000.