九州大学学術情報リポジトリ
Kyushu University Institutional Repository

Analysis of Heat Gains from Flat Plate Heater Measured using Multi-Axis Heat Flux Sensors

Fauzan, A.
Fire Safety Engineering Research Group, Department of Mechanical Engineering, Universitas Indonesia

H.M. Ega
Fire Safety Engineering Research Group, Department of Mechanical Engineering, Universitas Indonesia

J.A. Sigalingging
Fire Safety Engineering Research Group, Department of Mechanical Engineering, Universitas Indonesia

Y.S. Nugroho
Fire Safety Engineering Research Group, Department of Mechanical Engineering, Universitas Indonesia

https://doi.org/10.5109/4742130

出版情報：Evergreen. 8 (4), pp.844-849, 2021-12. 九州大学グリーンテクノロジー研究教育センター
バージョン：
権利関係：Creative Commons Attribution-NonCommercial 4.0 International

Analysis of Heat Gains from Flat Plate Heater Measured using Multi-Axis Heat Flux Sensors

A. Fauzan [1], H.M. Ega[2], J.A. Sigalingging[3], Y.S. Nugroho[4*]

[1,2,3,4] Fire Safety Engineering Research Group, Department of Mechanical Engineering, Universitas Indonesia, Depok, Jawa Barat 16424, Indonesia

*Corresponding author's email: yulianto.nugroho@ui.ac.id

(Received April 30, 2021; Revised December 16, 2021; accepted December 16, 2021).

Abstract: Thermal energy transfer is a phenomenon that has many benefits in its application to meet human needs through conduction, convection, and radiation. This research work will reconstruct a thermal radiation process using a radiation thermal measurement apparatus. This apparatus has been designed with several features that will measure many conditions. This research analyzes the effect of thermal inertia in the measurement process, compares the measurement result with and without the darkroom, and measures the heat flux received with different tilt angles to unknowing the effect of convection in the apparatus and the measurement results. In particular, this work will analyze the heat gains from a flat plate heater. In addition, the apparatus can also be used as a comprehensive heat transfer learning media.

Keywords: Thermal Radiation; Heat Flux Sensor; Convection; Measurement Apparatus

1. Introduction and background

Thermal energy transfer is a phenomenon that has attracted a lot of research works and education modules to study heat transfer parameters. The efforts include experimental studies to determine the value of heat flux[1)]. As a quantity of the rate of heat energy transfer through a given surface, a better understanding of how convection and radiation processes contribute to the heat flux is essential. Many energy utilization, efficiency, analysis, and thermal process safety applications are based on heat flux analysis. Thus, examining the characteristics of heat gains through heat transfer processes requires a comprehensive experiment measuring the heat flux density.

The heat transfer measurement apparatus was one of the experimental tools. This device can measure the value of heat flux that has been emitted from the heating surface. The device can be developed in many designs depending on the research objectives. Adityo R et al. developed an experimental apparatus using a conical heater as the source of heat[2)]. Their research objectives are to find the value of heat flux and map it in various positions, likewise, with the work of Sigalingging J.A. et al.. The objective of their work was to measure the amount and map out the heat wasted through radiation sourced from a flat heater[3)].

The apparatus design could generally come in many types depending upon their functions and research purposes[4)]. It is commonly called a radiometer. T. Echaniz et al. use infrared radiometer for their research[5)]. Their objective is to improve the sensitivity and accuracy of heat flux sensors. In addition, another research work by Tairan Fu et al. [6)] measure convection heat flux with a radiometer. They used the Gardon gauge sensor as their heat flux sensor. Meanwhile, research work by Arash Saidi et al. [7)] measured the heat transfer on the far surface based on measuring the heat flux and temperature on the near wall. With all those researches, we can conclude that the concept of the radiometer is suitable as heat flux research apparatus.

Regarding the contribution of convection and radiation processes, Safaei M.R et al. [8)] investigated thermal radiation and free convection heat transfer. Their research stimulated thermal surface radiation and nanofluid free convection in a two-dimensional shallow cavity. Further, Vega T. et al.[9)] arranged new measurements technique to measure heat fluxes in a mixed-mode heat transfer environment simultaneously.

The present work uses the multi-axis heat flux measurement apparatus. The same device was used by Sigalingging J.A. et al. [3),] and an improved design by Ega, H.M. et al. [10)]. This research aims to analyze the heat flux measurement apparatus as its characterization and the heat flux measurement in the radiation and convection process.

The measurement we conduct in this research will be highly affected by convection when the data retrieval point occurs on the boundary layer convection area. To see the boundary layer convection that occurs, we use this formula:

$$\delta/x = 3.93\,\mathrm{Pr}^{\frac{1}{2}}(0.952+\mathrm{Pr})^{1/4}\,Grx^{-1/4} \qquad (1)$$

Where δ is the thickness of the boundary layer (mm) in the direction of the height of the hot surface, represented by (mm), and Pr is the Prandtl number with a value of 0.7 dan Grx is Grashoff number[11]. In this research, we will reconstruct the heat transfer phenomena from flat plate heater to heat flux sensor and compare the influence of the convection process during the measurement.

The challenge for this experiment is the external environmental condition. In this experiment, the condition of ambient temperature, humidity, wind speed, and ambient pressure can not be set while it affects the measurement of the heat flux. The utilization of darkroom is applied in this research to minimize the external influence of the measurement result.

It is essential to consider thermal radiation and convection proportion in real-life cases, such as fire situations and other human life activities. In addition, the effects of convection and thermal radiation should be significantly considered in the design of buildings, coal storage in open stockpiles, and concentrated solar power plant.

2. Method and experimental setup

Multi-axis Heat Flux Sensor Measurement Apparatus

In this experiment, the device used has four main components: radiant flat plate, heat flux sensor, main workbench structure, and controller. To avoid radiation spread to the environment and prevent outside radiation interference, thermal radiation measuring equipment is placed in a dark room[12,13].

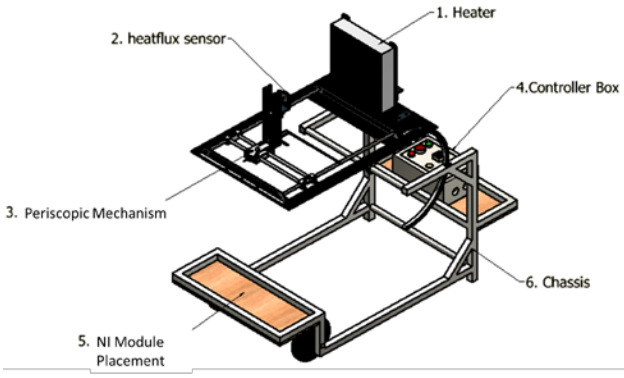

Fig 1: Design of Heat flux measurement apparatus

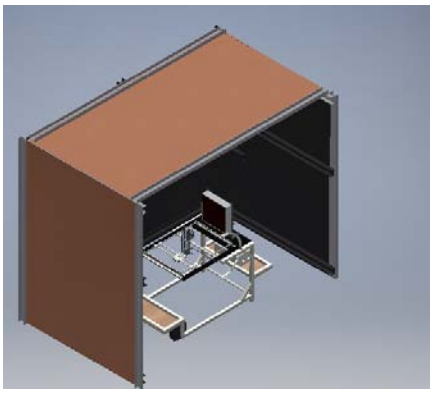

Fig 2: Dark room with device inside

The radiant flat plate heater has a dimension of 300 mm x 300 mm with 70 mm thickness. On the backside of the heater, a terminal box was placed to connect the heater with the power supply and thermocouple to the data logger. The nominal operating temperature range of this heater is among the range of 399 – 704°C, with a maximum input voltage of 480 V[14]. In this experiment, the maximum input voltage was only 220 V. Hence the maximum operating temperature reached was 550°C.

Heat flux sensor can measure heat-flux and temperature gradient on the surface[15]. A heat flux sensor is used to receive radiation flux from the heater and forward the readings to the data logger. The measurement range of this sensor is 5 – 200 kW/m^2 and has a continuous circulating cooling system into and outgoing of the sensor[16]. The initial result of the data retrieval is a function from the voltage measured with the thermophile sensor. The sensor manufacturer has calibrated the sensor so that there is a formula constant to change the initial result, which is in voltage, to heat flux function. The formula is as follows:

$$\phi = U/S \tag{2}$$

Where ϕ is heat flux value; U is a result of the measurement; S is the constant number equals to 0.000000457[16].

The control system for this thermal radiation measuring equipment used a digital temperature controller connected to a thermocouple sensor on the heat source. The digital temperature controller used a PID control system design. The controller was connected to a solid-state relay which functioned as a switch for electrical current towards the heat source, coupled with an emergency switch. The control system received the electrical source by connecting it to the standard AC 220V. Below is the wiring diagram for the panel box.

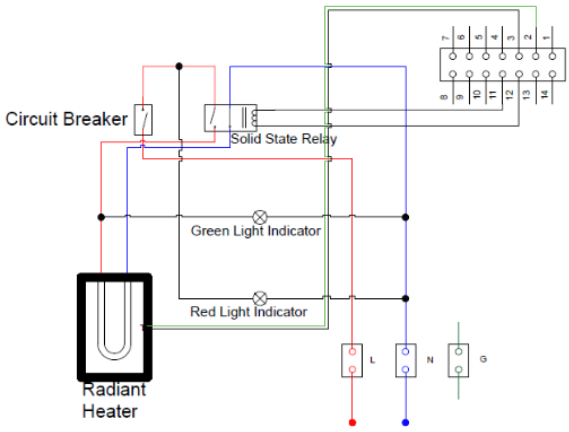

Fig 3: Wiring diagram for panel box controller of the device

The workbench on this equipment has several design advantages. The heater and sensor can move along the rails connected to the glider, which has fasteners. Thus the sensor will remain in place during the measurement. The sensor mount and its moving mechanism design made the

measurement variation by changing x- and y-axis parameters easier. For z-axis movements, a manual point-to-point mechanism was used on the sensor mount.

Data Acquisition Method

In order to get the measurement results, there were three methods of data collection conducted in this study. In all three methods, the sensor and heater position is determined to be facing each other parallel to 10 cm.

The first method is to take measurements with and without a dark room. This is to prove the initial hypothesis of why a darkroom was made in this study. The first temperature setting in this method is 400ºC continued with several temperature ranges between 100ºC – 550ºC. The second is to take measurements with the sensor and heater aligned and straight on the horizontal line. Measurements are made by changing the variable temperature setting of the heater (50ºC – 475ºC) to analyze the characteristics of the tool system to changes in temperature.

For the inclined orientation experiment, the temperature setting of heaters is 100°C, 400°C, and 550°C. These temperatures are based on minimum to maximum standard operation heater. For the variation of orientation, there are -60°, 0°, and 60°. These orientations assume to create maximum radiation and convection process[17,18]. Each orientation used the standard-setting temperature, and the results of each variation and temperature will be compared. Fig 4. presents an illustration of inclined orientation apparatus[10].

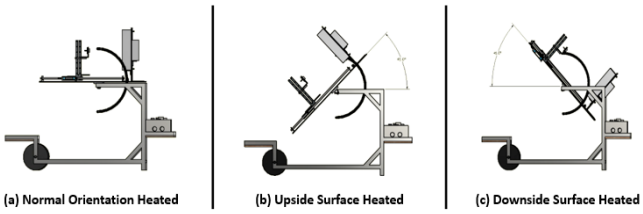

Fig 4: Variation of inclined apparatus orientation[10]

3. Results and Discussion

Effects of darkroom usage

As illustrated in Fig 5, it is shown that dark room usage in this research obtained different heat flux measurement results. Fig 5 tells us that heat flux measured with the darkroom has a higher value than heat flux measured without it. This experiment was conducted with a variable temperature range from 100ºC to 550ºC. For 400ºC temperature settings, we have 3750 W/m^2 with darkroom and 3150 W/m^2 with no darkroom usage. Each measurement shows a difference in heat flux received by the sensor is between 100 – 500 W/m^2. The average standard deviation is 1.86% for each measured temperature.

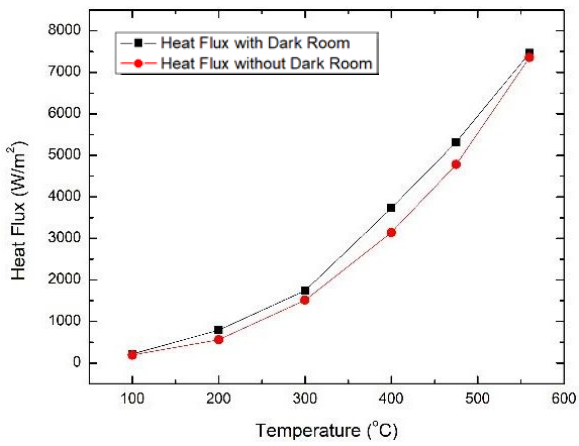

Fig 5: Comparison of heat flux measured with and without darkroom usage

Thermal Inertia

When the heater reached 550 ^{0}C, the solid-state relay has cut the current. However, a phenomenon occurred where the heater temperature had risen beyond the temperature setting range even though there was no current flowing into the heater. This phenomenon is caused by the influence of thermal inertia[19]. This phenomenon will significantly affect the working procedures of the tool. Therefore, measurement of the value of thermal inertia was carried out again on a thermal radiation measuring device with more specific temperature variations within the 50 ^{0}C - 475 ^{0}C temperature range, as shown by the graphic in Fig 6.

Fig 6 shows a difference in temperature between the stable setting temperature and the maximum temperature that occurs, due to the tendency of the heater to keep raising the temperature to a certain point (offset / ΔT). The offset that occurs from the setting of 50 ºC to 100 ºC increased then decreased to a temperature of 300 ºC and tended to be constant until the temperature of 475 ºC. The value of the different offset is influenced by the heater's heating capacity and thermal inertia values.

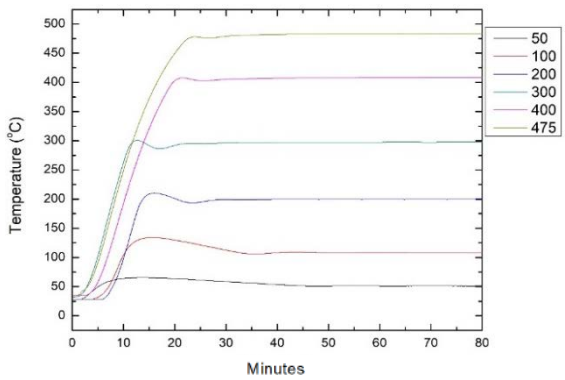

Fig 6: Heat flux measurement for analyzing thermal inertia phenomena.

Table 1 shows the results of temperature offset from each temperature setting.

Table 1. Delta temperature (offset) due to thermal inertia

Temperature Setting (^{0}C)	**ΔT (^{0}C)**
50	15.4
100	34.1
200	10.0
300	0.9
400	0.5
475	0.7

The value of ΔT at a temperature of 50ºC is lower than 100ºC because the total energy received until the electric current was disconnected was still lower and only able to raise the temperature (after the electric current was disconnected) by 15.4ºC. Meanwhile, the offset (ΔT) from 100ºC to 475ºC decreased as the heat from the heater once the current was cut off. The heat could not raise the temperature to exceed the ΔT at 100ºC. With the tendency that at higher temperature setting, the offset (ΔT) due to the phenomenon of thermal inertia is lower, then the operation of a thermal radiation measuring device to the maximum temperature will not endanger the safety of the tool system and the environment. Fig 7 illustrates the temperature setting in the heater and ΔT due to thermal inertia.

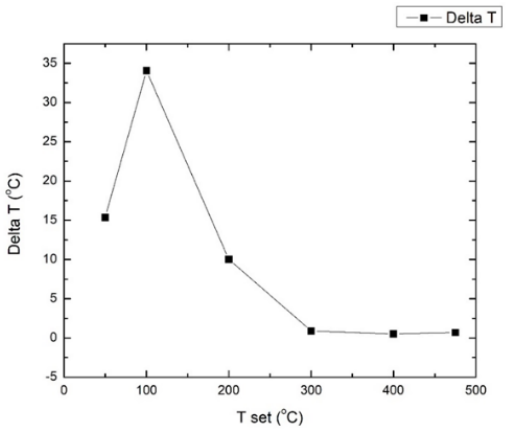

Fig 7: Temperature setting versus ΔT (offset)

Heat flux measurement with several inclinations

The heat flux value was measured from the readings at each orientation per one set temperature. Table 2 presents the value of heat flux for each orientation.

From the result, it can be concluded that at the orientation of 60°, the value of heat flux is highest. With assume in this orientation, the effect of convection is more dominant. Hence, the process radiation would be more dangerous if the heat source were below the emitted object. The heat flux increases because there is a buoyancy effect in the heat source. The average standard deviation for this measurement is 1.53% for each measured temperature.

Table 2. Result of each orientation

Orientation	Temperature	Heat Flux
-60°	100°C	233.2 W/m^2
	400°C	3806.1 W/m^2
	550°C	8319.3 W/m^2
0°	100°C	218.3 W/m^2
	400°C	3337.6 W/m^2
	550°C	8109.6 W/m^2
60°	100°C	130.2 W/m^2
	400°C	2965 W/m^2
	550°C	7438.8 W/m^2

Fig 8. shows a comparison value of heat flux in each temperature. It is also shown in higher temperature, the differential of heat flux more clearly. However, the value at -60° and 0° is almost typical because the convection effect has the same power in this orientation, but how much power can not be determined. At orientation 60°, the value of heat flux always became the smallest. It happens because the effect of radiation is dominant, so the captured heat flux is mainly from the radiation. This result shows that in inclined orientation, the radiation process will be affected by convection, making the heat flux received higher.

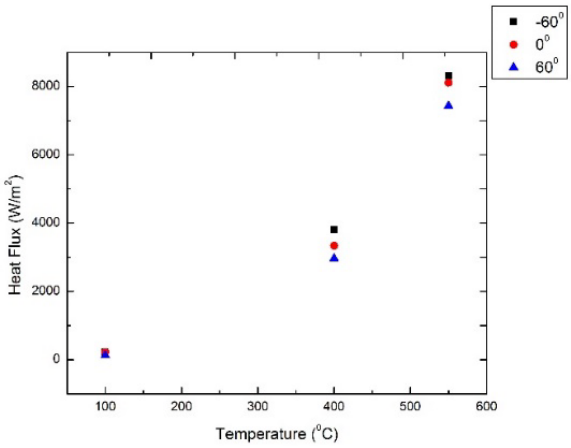

Fig.8: Comparison inclined orientation

4. Conclusions

The design of this apparatus was functioning very well. This apparatus can illustrate some theories of radiation and convection, as below:

1. Process of radiation will be more effective in darkroom areas because all electromagnetic waves will be absorbed well.
2. This apparatus has thermal inertia, but it does not harm the device and can still be tolerated.
3. This apparatus can show the effect of convection in the radiation process, and it showed the heat flux has a higher value.
4. Due to the buoyancy effect, convection has a greater effect when the heat source is placed below the object.

Acknowledgments

The authors would like to thank the financial support provided by the Ministry of Education and Culture of the Republic of Indonesia through Penelitian Dasar Unggulan Perguruan Tinggi (PDUPT) 2021 funding scheme under Grant No. NKB-218/UN2.RST/HKP.05.00/2021, and the PIT9 2019 grant managed by the Directorate for Research and Public Services (DRPM) Universitas Indonesia. The authors also would like to thank Prof. Raldi A Koestoer for the great discussion during the experimental works.

Nomenclature

Pr_x	Prandtl number
Gr_x	Grashoff number
c_p	specific heat capacity (J kg^{-1} K^{-1})
Φ	Heat flux (W/m^2)
kpc_p	Thermal inertia (W^{2}s/m^{4}K^2)
U	Voltage measured (v)
S	Constant number (0.000000457)
Δ	Convection boundary layers (m)
X	Distance between sensor to heater (m)

References

1) Silverman J. “The Application of Radiation Technology in Industrial Processes”. University of Maryland, USA.
2) Adityo, R., Agung, R., Satrio, P., and Nugroho, Y.S., "Measurement of thermal radiative heat transfer using a multi-axis heat flux sensor", IOP Conf. Series: Earth and Environmental Science 105 (2018) 012106, doi :10.1088/1755-1315/105/1/012106
3) Sigalingging, J.A. (2018). “Mapping of Heat Flux Radiation on a Flat Plate Using Multi-Axis Heat Flux Sensor”. Department of Mechanical Engineering University of Indonesia.
4) Habte A., Sengupta M., Andreas A., Wilcox S., Stoffel T. “Intercomparison of 51 Radiometers for Determining Global Horizontal Irradiance and Direct Normal Irradiance Measurements”. National Renewable Energy Laboratory, USA. Solar Energy 133 (2016), 372-393.
5) T. Echaniz., R.B. Perez Saez., M.J. Tello., 2017. "IR radiometer sensitivity and accuracy improvement by eliminating spurious radiation for emissivity measurements on highly specular samples in the 2–25 lm spectral range". Measurement 110 (2017), 22 – 26.http://dx.doi.org/10.1016/j.measurement.2017.06.010
6) T. Fu., A. Zong., Y. Zhang., H.S. Wang., 2016. "A method to measure heat flux in convection using Gardon Gauge". Applied Thermal Engineering 108 (2016),1357-1361. http://dx.doi.org/10.1016/j.applthermaleng.2016.07.164
7) Saidi. A., Kim. J., 2004. “Heat Flux with Minimal Impact on Boundary Conditions”. Experimental Thermal and Fluid Science 28 (2004), 903-908.
8) Safaei M.R., Karimipour A., Abdollahi A., Nguyen T.K., 2018. “The Investigation of Thermal Radiation and Free Convection Heat Transfer Mechanisms of Nanofluid Inside a Shallow Cavity by Lattice Boltzmann Method”. Physica A 509 (2018), 515-535.
9) Vega T., Wasson R.A., Lattimer B.Y., Diller T.E., 2015. “Partitioning Measurements of Convective and Radiative Heat Flux”. International Journal of Heat and Mass Transfer 84 (2015), 827-838.
10) Ega, H.M., Fauzan, A., Sigalingging, J.A., and Nugroho, Y.S., Improved design of multi-axis radiation heat transfer measurement apparatus for research and educational purposes. AIP Conference Proceedings 2227, 020004 (2020); https://doi.org/10.1063/5.0003090 Published Online: 07 May 2020.
11) Holman, J. P., "Heat Transfer 10th Edition", Mc-Graw Hill, NY, 2010..
12) Pal Piyush, Nayak A.K., Dev Rahul. “A modified Double Slope Basin Type Solar Distiller: Experimental and Enviro-Economic Study”. Department of Mechanical Engineering, Motilal Nehru National Institute of Technology Allahabad. EVERGREEN Joint Journal of Novel Carbon Resource Science & Green Asia Strategy, Vol. 05, Issue 01, pp. 52-61, March, 2018.
13) Tewari K., Dev Rahul. “Analysis of Modified Solar Water Heating System Made of Transparent Tubes & Insulated Metal Absorber”. Department of Mechanical Engineering, Motilal Nehru National Institute of Technology Allahabad. EVERGREEN Joint Journal of Novel Carbon Resource Science & Green Asia Strategy, Vol. 05, Issue 01, pp. 62-72, March, 2018
14) Omega, Radiant Heater, CRP Series User’s Guide.
15) Medvid A., Kaupuzs J., 1994. “Heat-Flux Sensor”. Sensor and Actuators 41-42 (1994), 381-383.
16) Hukseflux, Hukseflux Thermal Sensors USER MANUAL DR-SERIES, pp. 1-47.
17) King Fahd University, “Radiation Heat Transfer Characteristic”.
18) Fleury R., 2010. “Evaluation of Thermal Radiation Models of Fire Spread Between Objects”. Department of Civil and Natural Resources Engineering, University of Canterbury Christchurch, New Zealand.
19) Bellahcene L., Cheknane A., Bekkouche SMA., Sahel D. “The Effect of The Thermal Inertia on The Thermal Transfer in Building Wall”. Department of Mechanical Engineering, Amar Thelidji University of Laghouat. E3S Web of Conference 22, 2017.
20) J. Wang, R. L. Bras, G. Sivandran, and R. G. Knox. “A simple method for the estimation of thermal inertia”. Geophysical research letters, vol. 37,

L05404, doi:10.1029/2009GL041851, 2010.

21) Dehbi A., Kelm S., Kalilainen J., Mueller H., 2019. “The Influence of Thermal Radiation on The Free Convection Inside Enclosures”. Nuclear Engineering and Design 341 (2019), 176-185.
22) C. Maalouf, A.D. Tran Le, L. Chahwane, M. Lachi, E. Wurtz, T.H. Mai. “A Study of the use of thermal inertia in simple layer walls and its application to the use of a vegetal fiber material in buildings”. 1- LTM / GRESPI / URCA (EA 4301), Faculté des Sciences, BP. 1039, Moulin de la Housse, 51687 Reims Cedex 2, chadi.maalouf@univ-reims.fr.
23) Kishor T. Zingre, Xingguo Yang, Man Pun Wan. “Performance analysis of cool roof, green roof and thermal insulation on a concrete flat roof in tropical climate”. Energy Research Institute at NTU (ERI@N), EVERGREEN Joint Journal of Novel Carbon Resource Sciences & Green Asia Strategy, Vol. 02, Issue 02, pp. 34-43, September 2015.
24) Young-Deuk Kim, Kyaw Thu, Kim Choon Ng. “Evaluation and parametric optimization of the thermal performance and cost effectiveness of active-indirect solar hot water plants”. Faculty of Mechanical Engineering, Hanyang University, Ansan, Republic of Korea. EVERGREEN Joint Journal of Novel Carbon Resource Sciences & Green Asia Strategy, Vol. 02, Issue 02, pp. 50-60, September 2015.
25) Bennett, W. B., J. Wang, and R. L. Bras (2008), “Estimation of global ground heat flux”, J. Hydrometeorol., 9(4), 744–759.