九州大学学術情報リポジトリ
Kyushu University Institutional Repository

DYNAMICS OF POLYNOMIAL DIFFEOMORPHISMS OF C2: COMBINATORIAL AND TOPOLOGICAL ASPECTS

Ishii, Yutaka
Department of Mathematics, Faculty of Mathematics, Kyushu University

https://hdl.handle.net/2324/4123946

出版情報：Arnold Mathematical Journal. 3 (1), pp.119-173, 2017-04-25. Springer
バージョン：
権利関係：

KYUSHU UNIVERSITY

DYNAMICS OF POLYNOMIAL DIFFEOMORPHISMS OF $\mathbb{C}^2$: COMBINATORIAL AND TOPOLOGICAL ASPECTS

YUTAKA ISHII

Dedicated to Professor Shigehiro Ushiki for his retirement from Kyoto University

Abstract. The figure below was drawn by S. Ushiki using his software *HenonExplorer* [U1]. This complicated object is the Julia set of a complex Hénon map $f_{c,b}(x,y) = (x^2 + c - by, x)$ defined on $\mathbb{C}^2$ together with its stable and unstable manifolds, hence it is a fractal set in the real 4-dimensional space! The purpose of this paper is to survey some results, questions and problems on the dynamics of polynomial diffeomorphisms of $\mathbb{C}^2$ including complex Hénon maps with an emphasis on the combinatorial and topological aspects of their Julia sets.

Figure 1. The Phoenix [U1]. It is interesting to contrast this figure with the earlier picture (which looks like a phoenix) published in [U2].

Date: *April 24, 2017.* This manuscript was written for a special volume of the Arnold Mathematical Journal on the occasion of the 25th anniversary of the Institute for Mathematical Sciences at Stony Brook University.

Contents

1. Dynamics of polynomial maps in one complex variable 3
2. Preliminaries on polynomial diffeomorphisms of $\mathbb{C}^2$ 14
2.1. Classification 14
2.2. Ten problems 15
3. Connectivity of the Julia sets and their external rays 16
3.1. Connectivity 16
3.2. External rays 17
4. Fatou–Bieberbach domains and Lakes of Wada in $\mathbb{C}^2$ 18
4.1. Lakes of Wada 18
4.2. FB domains 20
5. Construction of hyperbolic complex Hénon maps 21
5.1. Hyperbolicity 21
5.2. Non-planarity 23
6. Three methods to describe hyperbolic Julia sets 24
6.1. Hubbard trees 24
6.2. IMG actions 27
6.3. Automata 31
7. Exploring the parameter space of the Hénon family 33
7.1. Is ρ surjective? 33
7.2. Lipa's conjectures 33
7.3. Visualization in $\mathbb{C}^2$ 39
8. Applications to the dynamics of Hénon maps in $\mathbb{R}^2$ 41
8.1. Two real loci 41
8.2. Ground states 43
References 44

1. Dynamics of polynomial maps in one complex variable

Dynamics of complex Hénon maps or, more generally, polynomial diffeomorphisms of $\mathbb{C}^2$ has been a growing subject in the last 25 years[1]. The purpose of this survey paper is to discuss some results, questions and problems on this subject with an emphasis on the combinatorial and topological aspects of their Julia sets. We regret not to touch the ergodic properties of polynomial diffeomorphisms of $\mathbb{C}^2$ [BS$_{\mathbb{C}}$3, BLS1, BLS2] and some of the recent remarkable progress such as the structural stability [DL], the classification of Fatou components [LP], etc. For other related topics, we recommend the survey papers [B1, B2, B3, S2].

In this section we present ten topics on the dynamics of polynomial maps in dimension one. These topics are chosen to foreshadow the problems we will present in dimension two. For some of them we restrict our attention to the quadratic family $p_c(z) = z^2 + c$. Most results in this section are well-known except for the item (vi) below where we present a new construction of automata called *tight automata* [IS2] which describe the combinatorics of Julia sets.

The basic terminologies and results which appear in this section can be found in [M2]. Below we use the notations $\mathbb{N}_0 \equiv \mathbb{N} \cup \{0\}$, $\mathbb{T} \equiv \mathbb{R}/\mathbb{Z}$ and $\Delta \equiv \{z \in \mathbb{C} : |z| < 1\}$.

(i) Connectivity of J_p. Let $p : \mathbb{C} \to \mathbb{C}$ be a polynomial of degree $d \geq 2$. We call

$$K_p \equiv \big\{z \in \mathbb{C} : \{p^n(z)\}_{n\geq 0} \text{ is bounded in } \mathbb{C}\big\}$$

the *filled Julia set* of p and its boundary $J_p \equiv \partial K_p$ the *Julia set* of p. Let

$$\mathrm{Crit}(p) \equiv \big\{z \in \mathbb{C} : p'(z) = 0\big\}$$

be the set of critical points of p. The following is classical.

Theorem 1.1. *The Julia set J_p is connected iff* $\mathrm{Crit}(p) \subset K_p$.

As in Theorem 1.1 (and as we will see below), critical points play a dynamically important role. However, polynomial diffeomorphisms of $\mathbb{C}^2$ do not have critical points in the standard sense. In Subsection 3.1 we will introduce the Green function and use it to define "dynamical critical points" for such maps. To motivated it, let us first introduce the *Green function* for p:

$$G_p(z) \equiv \lim_{n\to\infty} \frac{1}{d^n} \log^+ |p^n(z)|,$$

where $\log^+ t \equiv \max\{0, \log t\}$. One can see that G_p is continuous, subharmonic and satisfies $G_p(p(z)) = d \cdot G_p(z)$ on $\mathbb{C}$. It is harmonic on $\mathbb{C} \setminus K_p$, and $G_p(z) > 0$ iff $z \in \mathbb{C} \setminus K_p$. Let

$$\mathrm{Crit}(G_p) \equiv \big\{z \in \mathbb{C} \setminus K_p : z \text{ is a critical points of } G_p\big\}.$$

Since $z \in \mathrm{Crit}(G_p)$ iff $p^k(z) \in \mathrm{Crit}(p) \setminus K_p$ for some $k \geq 0$, Theorem 1.1 yields

Corollary 1.2. *The Julia set J_p is connected iff* $\mathrm{Crit}(G_p) = \emptyset$.

This statement will be rephrased in the context of polynomial diffeomorphisms of $\mathbb{C}^2$ in Subsection 3.1 (see Corollary 3.4) which is a theoretical basis for a computer algorithm to draw the connectedness locus in the parameter space of the complex Hénon family.

(ii) External rays for J_p. By Böttcher's theorem there exists $R > 0$ so that

$$\varphi_p(z) \equiv \lim_{n\to\infty} (p^n(z))^{\frac{1}{d^n}}$$

defines a holomorphic map with $\varphi_p(z)/z \to 1$ as $|z| \to \infty$ (by choosing an appropriate d^n-th root) and satisfies $\varphi_p(p(z)) = (\varphi_p(z))^d$ for $|z| > R$, which serves as the *Böttcher coordinate* of p near ∞. We also have $G_p(z) = \log |\varphi_p(z)|$ for $|z| > R$.

[1] Almost the same age as the IMS at Stony Brook.

Now assume that J_p is connected. Then, $(\mathbb{C}\cup\{\infty\})\setminus K_p$ is a simply connected domain in the Riemann sphere. Therefore,

Theorem 1.3. *If J_p is connected, then the map φ_p extends to a conformal isomorphism:*

$$\varphi_p : \mathbb{C}\setminus K_p \longrightarrow \mathbb{C}\setminus\overline{\Delta}$$

which satisfies $(\varphi_p(z))^d = \varphi_p(p(z))$.

Definition 1.4. *We call $R_p(\theta)\equiv\{\varphi_p^{-1}(re^{2\pi i\theta}) : r>1\}$ the external ray of angle $\theta\in\mathbb{T}$ for K_p.*

An external ray $R_p(\theta)$ is said to *land on a point* $z_p(\theta)\in J_p$ if the limit point $\lim_{r\downarrow 1}\varphi_p^{-1}(re^{2\pi i\theta})$ exists and is equal to $z_p(\theta)$.

(iii) Expansion on J_p. Recall the following notion.

Definition 1.5. *We say that a polynomial map p is expanding on J_p if there exist $C>0$ and $\lambda>1$ so that for any $z\in J_p$ we have $\|(p^n)'(z)\|\geq C\lambda^n$ $(n\geq 0)$, where $\|\cdot\|$ is the norm with respect to the spherical metric.*

The next classical result provides a criterion for a polynomial p to be expanding.

Theorem 1.6. *A polynomial map p is expanding on J_p iff $p^n(c)$ either converges to an attractive cycle of p or tends to infinity for every $c\in\mathrm{Crit}(p)$.*

The proof is supplied by using the Poincaré metric defined in a neighborhood of J_p.

(iv) Quotient of a circle. Assume that J_p is connected and p is expanding on J_p. Then, $R_p(\theta)$ is shown to land on a point $z_p(\theta)\in J_p$ for any $\theta\in\mathbb{T}$. This gives rise to a continuous surjection:

$$\psi_p : \mathbb{T}\ni\theta\longmapsto z_p(\theta)\in J_p$$

which satisfies $\psi_p(\delta_d(\theta)) = p(\psi_p(\theta))$, where $\delta_d(\theta)\equiv d\cdot\theta$. For $\theta,\theta'\in\mathbb{T}$, we write $\theta\sim_{\mathrm{DH}}\theta'$ iff $\psi_p(\theta)=\psi_p(\theta')$. Then the quotient dynamics $\delta_d/_{\sim_{\mathrm{DH}}} : \mathbb{T}/_{\sim_{\mathrm{DH}}}\to\mathbb{T}/_{\sim_{\mathrm{DH}}}$ is well-defined.

Theorem 1.7. *Assume that J_p is connected and p is expanding on J_p. Then, the factor map $\psi_p/_{\sim_{\mathrm{DH}}} : \mathbb{T}/_{\sim_{\mathrm{DH}}}\to J_p$ is a topological conjugacy from $\delta_d/_{\sim_{\mathrm{DH}}} : \mathbb{T}/_{\sim_{\mathrm{DH}}}\to\mathbb{T}/_{\sim_{\mathrm{DH}}}$ to $p : J_p\to J_p$.*

The equivalence relation $\sim_{\mathrm{DH}}$ is well understood (see [D, T] and (v), (vi), (vii) and (ix) below).

(v) Hubbard trees. Hubbard trees in $\mathbb{C}$ have been originally defined by J. H. Hubbard in Orsay Notes [DH] (see also [D]). Here we introduce Hubbard trees presented in [I2] which is given in the framework of multivalued dynamical systems [IS1] (the original definition of a Hubbard tree is a single space $\mathcal{T}^0$ defined below). Let us first recall some terminologies from [IS1].

A *multivalued dynamical system* is a quadruple $(X^0, X^1; \iota_X, f)$ where X^0 and X^1 are a pair of spaces and $\iota_X, f : X^1\to X^0$ is a pair of maps between them. Note that ι_X is not necessarily injective. If ι_X is injective, then $\iota_X^{-1}\circ f$ is single-valued, and if ι_X is not injective, then $\iota_X^{-1}\circ f$ is multivalued. The standard construction of the pullbacks of spaces gives a sequence of multivalued dynamical systems $\iota_X, f : X^{n+1}\to X^n$, where X^n is the space of orbits of length n:

$$X^n = \big\{(x_0,\ldots,x_{n-1})\in(X^1)^n : f(x_k)=\iota_X(x_{k+1})\big\}.$$

This gives rise to the *one-sided orbit space*:

$$X^{+\infty}\equiv\big\{(x_k)_{k\geq 0}\in(X^1)^{\mathbb{N}_0} : f(x_k)=\iota_X(x_{k+1})\big\}$$

and the *two-sided orbit space*:

$$X^{\pm\infty}\equiv\big\{(x_k)_{k\in\mathbb{Z}}\in(X^1)^{\mathbb{Z}} : f(x_k)=\iota_X(x_{k+1})\big\}$$

as well as the shift maps $f^{+\infty} : X^{+\infty}\to X^{+\infty}$ and $f^{\pm\infty} : X^{\pm\infty}\to X^{\pm\infty}$ respectively.

A classical dynamical system $f : X \to X$ can be interpreted as a multivalued dynamical system by letting $X^0 = X^1 \equiv X$ and $\iota_X : X^1 \to X^0$ to be the identity map. In this case, $X^{\pm\infty}$ can be identified with the so-called natural extension of $f : X \to X$. A polynomial-like map $f : U \to V$ with $\overline{U} \subset V$ is regarded as a multivalued dynamical system by letting $X^0 \equiv V$, $X^1 \equiv U$ and $\iota_X : U \to V$ is the inclusion map (a similar idea has been introduced in [Ka] for the study of renormalization of polynomial maps). When both X^0 and X^1 are finite sets, any pair of maps $\iota_X, f : X^1 \to X^0$ can be interpreted as a finite directed graph; the vertex set is X^0 and we regard an element $x \in X^1$ as an arrow from $\iota_X(x) \in X^0$ to $f(x) \in X^0$. In this case, the orbit space $X^{+\infty}$ (resp. $X^{\pm\infty}$) is a one-sided (resp. two-sided) subshift of finite type.

An important class of multivalued dynamical systems is

Definition 1.8. *Let (X^m, d^m) $(m = 0, 1)$ be complete length spaces. A multivalued dynamical system $\iota_X, f : X^1 \to X^0$ is called expanding if (i) $f : X^1 \to X^0$ is a covering, and (ii) there exist $\delta > 0$ and $\lambda > 1$ so that $d^0(f(x), f(x')) \geq \lambda \cdot d^0(\iota_X(x), \iota_X(x'))$ holds whenever $d^1(x, x') < \delta$.*

Now we formulate a Hubbard tree as a multivalued dynamical system after [I2] based on the following notions [D]. Throughout this subsection we assume that any critical point of p is either periodic or tends to infinity. Let A^0 be the set of superattractive periodic points of p and set $A^1 \equiv p^{-1}(A^0)$. For each connected component U of $\mathrm{int}(K_p)$ there is a unique $a \in U$ which is eventually mapped to A^0. Let $\chi_U : U \to \Delta$ be a Böttcher coordinate of U so that $\chi_U(a) = 0$. Since ∂U is locally connected, this extends to a homeomorphism $\chi_U : \overline{U} \to \overline{\Delta}$. An *internal ray* in U is the inverse image of a ray in Δ by χ_U. An arc $\gamma \subset K_p$ is called a *legal arc* if for any connected component U of $\mathrm{int}(K_p)$, the intersection $\gamma \cap U$ is contained in the union of two rays in U. Then, any two points in K_p is connected by a unique legal arc. The *legal hull* of a finite subset of K_p is the union of such legal arcs connecting any two points in the finite subset.

For $m = 0, 1$, the *vein* $\mathcal{H}^m$ is defined as the legal hull of A^m in the filled Julia set K_p. If a point $a \in \mathcal{H}^m$ belongs to A^m, we replace $a \in \mathcal{H}^m$ by a loop to obtain a tree decorated with loops denoted by $\mathcal{T}^m$. The polynomial map p naturally induces a map $\tau : \mathcal{T}^1 \to \mathcal{T}^0$ up to homotopy. One can also define a continuous map $\iota_{\mathcal{T}} : \mathcal{T}^1 \to \mathcal{T}^0$ up to homotopy which is the identity on $\mathcal{T}^0$ and smashes each connected component of $\mathcal{T}^1 \setminus \mathcal{T}^0$ to a point in $\mathcal{T}^0$.

Definition 1.9. *We call the multivalued dynamical system $\iota_{\mathcal{T}}, \tau : \mathcal{T}^1 \to \mathcal{T}^0$ the Hubbard tree.*

Let $\tau^{+\infty} : \mathcal{T}^{+\infty} \to \mathcal{T}^{+\infty}$ be the shift map on the one-sided orbit space of $\iota_{\mathcal{T}}, \tau : \mathcal{T}^1 \to \mathcal{T}^0$.

Theorem 1.10. *Assume that all critical points of p are either periodic or tend to infinity. Then, $p : J_p \to J_p$ is topologically conjugate to $\tau^{+\infty} : \mathcal{T}^{+\infty} \to \mathcal{T}^{+\infty}$.*

A proof can be found in [I2] which uses the idea of *homotopy shadowing* developed in [IS1].

(vi) Tight automata. In his PhD thesis [Ol], Ricardo Oliva has given a recipe to construct automata which describe the equivalence relation $\sim_{\mathrm{DH}}$ in Theorem 1.7 for some real quadratic polynomials. This recipe was supported by a great deal of evidence but without a formal proof. Following our forthcoming paper [IS2] we here construct an automaton called a tight automaton for any expanding polynomial map and justify the argument of Oliva. In [IS2] we explain the construction only for the quadratic case, but here we discuss a polynomial of arbitrary degree $d \geq 2$. Throughout the item (vi) we assume that any critical point of p is either periodic or tends to infinity. In particular, p is expanding on J_p.

Remark 1.11. *In* [IS2] *we will introduce a yet another version of Hubbard tree called a homotopy Hubbard tree as a purely homotopical object. We will demonstrate that this notion not only fits better to the construction of tight automata but also unifies several other combinatorial descriptions of Julia sets such as Thurston's lamination theory* [T].

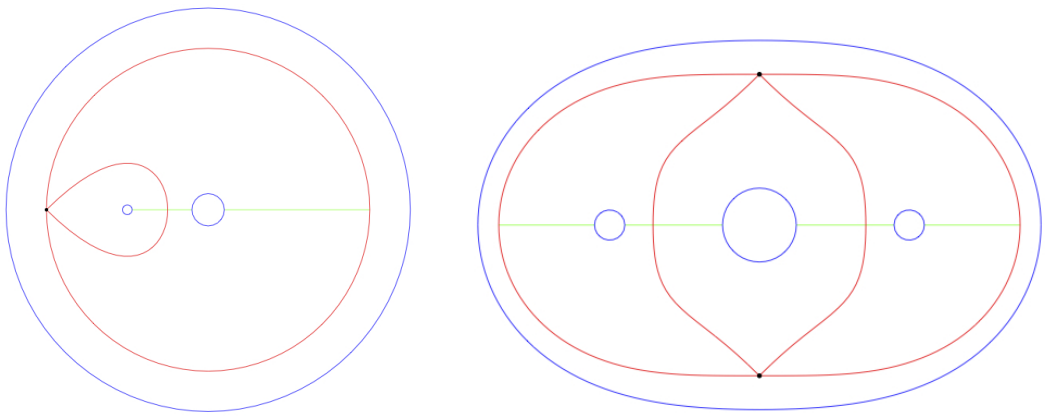

FIGURE 2. Tight paths in W^0 (left) and in W^1 (right) for the Basilica map [IS2].

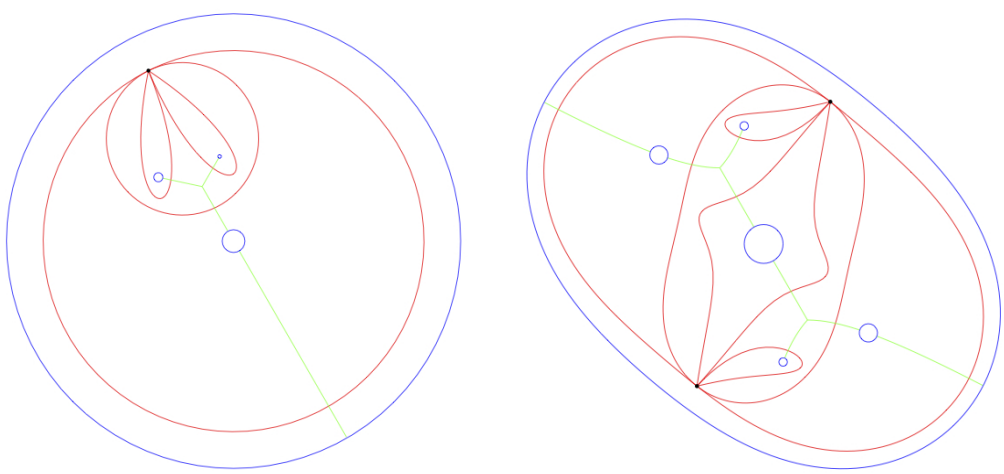

FIGURE 3. Tight paths in W^0 (left) and in W^1 (right) for the Rabbit map [IS2].

Let V^0 be a neighborhood of K_p which does not contain any critical points of p in $\mathbb{C} \setminus K_p$ and satisfies $\overline{p^{-1}(V^0)} \subset V^0$. Take a neighborhood U^0 of the set A^0 of superattractive periodic points of p so that $\overline{p(U^0)} \subset U^0$. Let $W^0 \equiv V^0 \setminus \overline{U^0}$ and $W^1 \equiv p^{-1}(W^0)$. This defines a multivalued dynamical system $\iota_W, p : W^1 \to W^0$, where ι_W is the inclusion.

Denote by $z_p(\theta)$ the landing point of the external ray $R_p(\theta)$. Let $\widehat{\mathcal{H}}^0$ be the legal hull of $\{z_p(0)\} \cup A^0$ in K_p and define $\widehat{\mathcal{T}}^0 \equiv \widehat{\mathcal{H}}^0 \cup R_p(0)$. Similarly, let $\widehat{\mathcal{H}}^1$ be the legal hull of $\left\{z_p(0), z_p(\frac{1}{d}), \dots, z_p(\frac{d-1}{d})\right\} \cup A^1$ in K_p and define $\widehat{\mathcal{T}}^1 \equiv \widehat{\mathcal{H}}^1 \cup R_p(0) \cup R_p(\frac{1}{d}) \cup \dots \cup R_p(\frac{d-1}{d})$. We call the pair of spaces $\widehat{\mathfrak{T}} \equiv (\widehat{\mathcal{T}}^0, \widehat{\mathcal{T}}^1)$ the *extended Hubbard tree* of p.

Choose a basepoint $b \in R_p(\frac{1}{2})$ and set $\{b_0, b_1 \dots, b_{d-1}\} \equiv p^{-1}(b)$ so that $b_k \in R_p(\frac{2k+1}{2d})$.

Definition 1.12. *A path in W^0 from b to itself which intersects $\widehat{\mathcal{T}}^0$ transversally at most once is called a tight path in W^0. A path in W^1 from a point in $p^{-1}(b)$ to a point in $p^{-1}(b)$ which intersects $\widehat{\mathcal{T}}^1$ transversally at most once is called a tight path in W^1.*

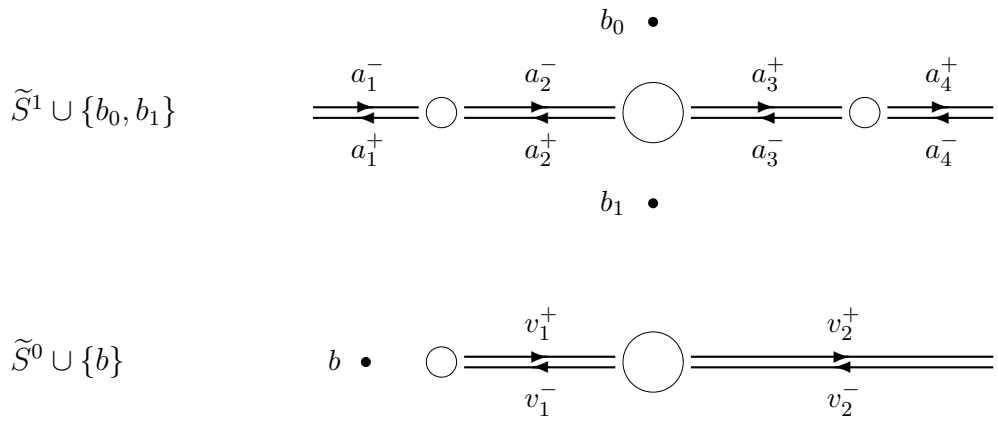

FIGURE 4. Directed segments for the Basilica map [IS2].

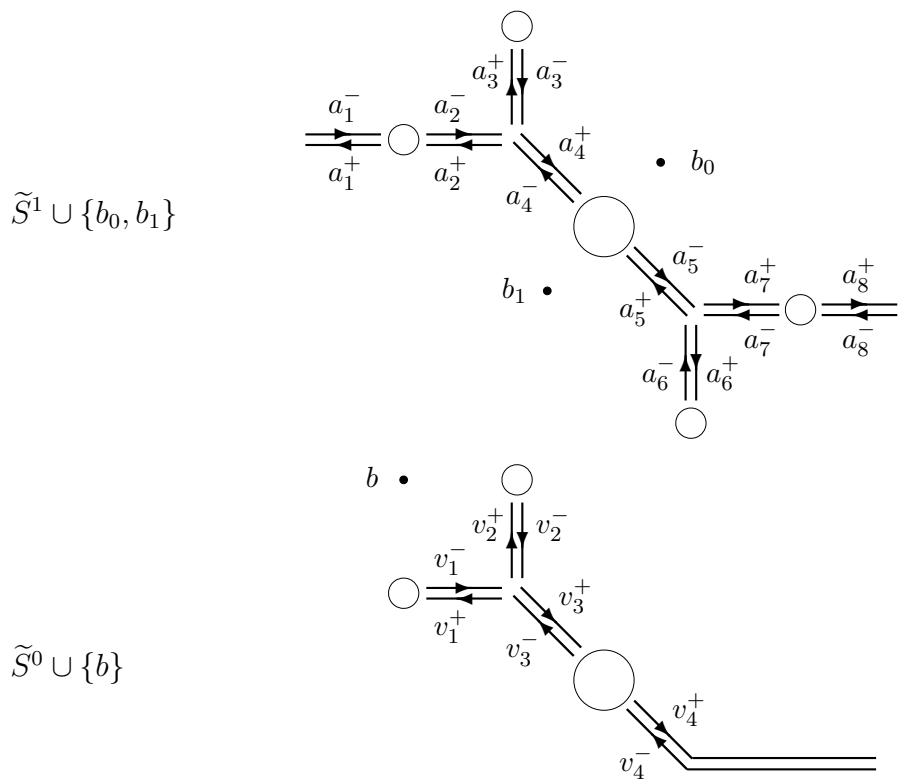

FIGURE 5. Directed segments for the Rabbit map [IS2].

See Figure 2 where the blue curves[2] represent the boundaries of W^m, green curves represent the segment part of $\widehat{\mathcal{T}}^m$ and the red curves represent the tight paths in W^m $(m = 0, 1)$ for the Basilica map. Figure 3 describes the corresponding objects for the Rabbit map.

[2]Please see the electronic version of this paper to distinguish the color of the curves in Figures 2 and 3.

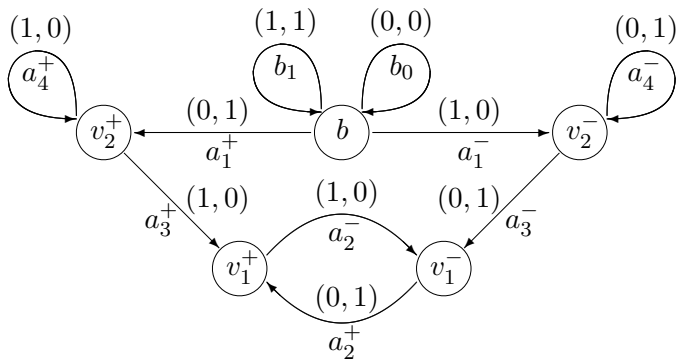

FIGURE 6. Tight automaton for the Basilica Julia set [IS2].

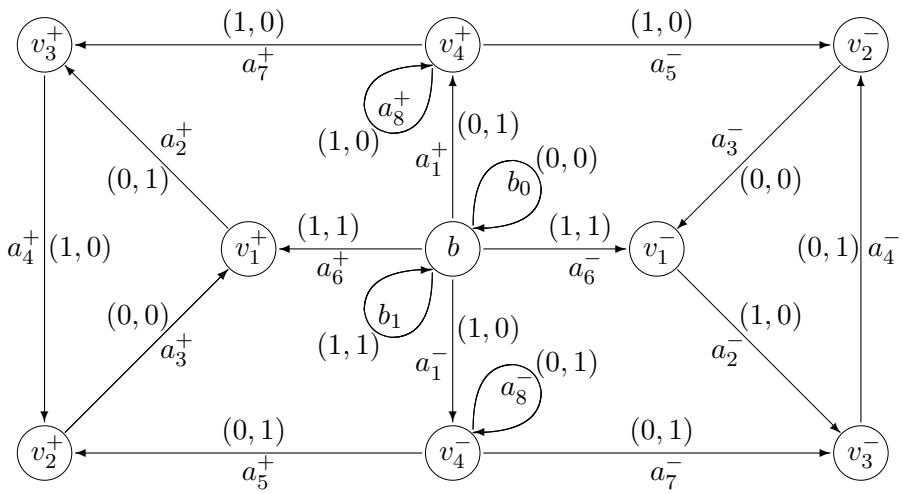

FIGURE 7. Tight automaton for the Rabbit Julia set [IS2].

The homotopy class of a path in W^0 from b to itself relative to endpoints is called a *tight homotopy class in* W^0 if it contains a tight path in W^0. The homotopy class of a path in W^1 from a point in $p^{-1}(b)$ to a point in $p^{-1}(b)$ relative to endpoints is called a *tight homotopy class in* W^1 if it contains a tight path in W^1.

Now we construct a labeled directed graph as follows. Fix a family of paths γ_i in $W^0 \setminus \widehat{\mathcal{T}}^0$ from b to b_i. The vertex set consists of all tight homotopy classes in W^0. The arrow set consists of all tight homotopy classes in W^1. When $[\gamma]$ is the tight homotopy class of a tight path γ from b_i to b_j in W^1, one can check that both $[p(\gamma)]$ and $[\gamma_i \cdot \iota_W(\gamma) \cdot \gamma_j^{-1}]$ are tight in W^0, where $\cdot$ denotes the concatenation of two paths and γ^{-1} is the time reversal of γ. Therefore, such $[\gamma]$ can be regarded as an arrow from its tail $[\gamma_i \cdot \iota_W(\gamma) \cdot \gamma_j^{-1}]$ to its head $[p(\gamma)]$ and we label it as $(i, j) \in \Sigma_d^2$, where $\Sigma_d \equiv \{0, \dots, d-1\}$. This gives a directed labeled graph denoted by $\mathfrak{A}_T(\widehat{\mathfrak{T}})$.

Definition 1.13. *The directed labeled graph* $\mathfrak{A}_T(\widehat{\mathfrak{T}})$ *is called a tight automaton of* $\widehat{\mathfrak{T}}$.

Denote by $\Sigma_d^{\mathbb{N}_0} \equiv \{\varepsilon_0\varepsilon_1 \cdots : \varepsilon_i \in \Sigma_d\}$ the space of all one-sided sequences over Σ_d equipped with the product topology. Let $\sigma : \Sigma_d^{\mathbb{N}_0} \to \Sigma_d^{\mathbb{N}_0}$ be the shift map given by $\sigma(\varepsilon_0\varepsilon_1 \cdots) \equiv \varepsilon_1\varepsilon_2 \cdots$.

Let $\mathfrak{A}_T = \mathfrak{A}_T(\widehat{\mathfrak{T}})$ be the tight automaton of $\widehat{\mathfrak{T}}$. For $\underline{\varepsilon} = (\varepsilon_n)_{n\in\mathbb{N}_0}, \underline{\varepsilon}' = (\varepsilon'_n)_{n\in\mathbb{N}_0} \in \Sigma_d^{\mathbb{N}_0}$ we write $\underline{\varepsilon} \sim_{\mathfrak{A}_T} \underline{\varepsilon}$ if there exists a sequence of successive arrows in $\mathfrak{A}_T$ along which the sequence of labelings is $(\varepsilon_n, \varepsilon'_n)_{n\in\mathbb{N}_0}$. This defines the factor $\sigma/_{\sim_{\mathfrak{A}_T}} : \Sigma_d^{\mathbb{N}_0}/_{\sim_{\mathfrak{A}_T}} \to \Sigma_d^{\mathbb{N}_0}/_{\sim_{\mathfrak{A}_T}}$ of the shift map. The next result shows that the tight automaton describes the combinatorics of the Julia set.

Theorem 1.14 (Ishii–Smillie [IS2])**.** *Let p be a polynomial of degree $d \geq 2$ and assume that any critical point of p is either periodic or tends to infinity. Then, $p : J_p \to J_p$ is topologically conjugate to $\sigma/_{\sim_{\mathfrak{A}_T}} : \Sigma_d^{\mathbb{N}_0}/_{\sim_{\mathfrak{A}_T}} \to \Sigma_d^{\mathbb{N}_0}/_{\sim_{\mathfrak{A}_T}}$.*

Next we explain a recipe *à la* Oliva [Ol] to compute tight automata in terms of the extended Hubbard tree alone. For $z \in \widehat{\mathcal{T}}^m$ $(m = 0, 1)$ the number of connected components of $\widehat{\mathcal{T}}^m \setminus \{z\}$ is called the *valency* at z and denoted by $v(z)$. A point $z \in \widehat{\mathcal{T}}^m$ is said to be *branching* if $v(z) \geq 3$. Let B^m be the set of branching points in $\widehat{\mathcal{T}}^m$. The *trunk* $\mathcal{T}_{\mathrm{tr}}$ of $\widehat{\mathcal{T}}^1$ is the union of the legal hull of $\{z_p(0), \ldots, z_p(\frac{d-1}{d})\}$ in K_p and $R_p(0) \cup \cdots \cup R_p(\frac{d-1}{d})$. Note that $\mathcal{T}_{\mathrm{tr}}$ cuts W^1 into d pieces.

Recipe for $\mathfrak{A}_E$. Consider the following multivalued dynamical system:

$$\iota_T, \tau : \widehat{\mathcal{T}}^1 \cup \{b_0, \ldots, b_{d-1}\} \longrightarrow \widehat{\mathcal{T}}^0 \cup \{b\},$$

where ι_T is the identity map on $R_p(0)$, $\iota_T(z) \equiv b$ is the constant map on $R_p(\frac{1}{d}) \cup \cdots \cup R_p(\frac{d-1}{d})$, and $\iota_T(b_k) = \tau(b_k) \equiv b$ for $k \in \Sigma_d$.

(1) A connected component of $\widehat{\mathcal{T}}^m \setminus (\{\text{loops in } \mathcal{T}^m\} \cup B^m)$ is called a *segment* in $\widehat{\mathcal{T}}^m$. Denote by S^m the set of segments in $\widehat{\mathcal{T}}^m$. To each segment $s \in S^m$ we associate two directions to obtain the two *directed segments* denoted by s^+ and s^-. Let $\widetilde{S}^m$ be the totality of the directed segments in $\widehat{\mathcal{T}}^m$. For two directed subsegments s and s' in $\widehat{\mathcal{T}}^m$, we write $s \propto s'$ if $s \subset s'$ as subsets of $\widehat{\mathcal{T}}^m$ and the orientations of s and s' coincide.

(2) We let $\widetilde{S}^1 \cup \{b_0, \ldots, b_{d-1}\}$ be the arrow set and $\widetilde{S}^0 \cup \{b\}$ be the vertex set of the directed graph as follows. Choose $a \in \widetilde{S}^1 \cup \{b_0, \ldots, b_{d-1}\}$.
   - When both $\iota_T(a)$ and $\tau(a)$ are directed subsegments in $\widehat{\mathcal{T}}^0$, we draw an arrow from $v \in \widetilde{S}^0$ to $v' \in \widetilde{S}^0$ so that $\iota_T(a) \propto v$ and $\tau(a) \propto v'$ are satisfied.
   - When $\iota_T(a)$ is a point and $\tau(a)$ is a directed subsegment in $\widehat{\mathcal{T}}^0$, we draw an arrow from b to $v' \in \widetilde{S}^0$ so that $\tau(a) \propto v'$ is satisfied.
   - When both $\iota_T(a)$ and $\tau(a)$ are points (this happens exactly when $a = b_k$ for some $k \in \Sigma_d$), we draw an arrow from b to itself.

   This give a new multivalued dynamical system:

$$\iota_T, \tau : \widetilde{S}^1 \cup \{b_0, \ldots, b_{d-1}\} \longrightarrow \widetilde{S}^0 \cup \{b\}.$$

   Note that there are $2(d-1)$ arrows which represent the directed segments corresponding to $R_p(\frac{1}{d}), \ldots, R_p(\frac{d-1}{d}) \in S^1$ from b to the directed segments corresponding to $R_p(0) \in S^0$.

(3) We label the arrows as follows to obtain an automaton $\mathfrak{A}_E$.
   - When $a \in \widetilde{S}^1$ is a subset of $\mathcal{T}_{\mathrm{tr}}$, we label the arrow by (k, k'), where b_k (resp. $b_{k'}$) belongs to the right-hand (resp. left-hand) component of $W^1 \setminus \mathcal{T}_{\mathrm{tr}}$.
   - When $a \in \widetilde{S}^1$ is a subset of $\widehat{\mathcal{T}}^1 \setminus \mathcal{T}_{\mathrm{tr}}$, we label the arrow by (k, k), where b_k belongs to the connected component of $W^1 \setminus \mathcal{T}_{\mathrm{tr}}$ containing a.
   - When $a = b_k$, we label the arrow by (k, k).

(end of recipe for $\mathfrak{A}_E$)

The directed segments for the Basilica map and the Rabbit map are presented in Figures 4 and 5 respectively. The tight automata for the Basilica map and the Rabbit map computed through the recipe above are presented in Figures 6 and 7 respectively.

Let $M \equiv \max\{v(z) : z \in \widehat{\mathcal{T}}^1\}$. We have

Theorem 1.15 (Ishii–Smillie [IS2])**.** *Assume that $M \leq 3$. Then, $\mathfrak{A}_T = \mathfrak{A}_E$.*

The above theorem applies to the real quadratic polynomials as well as the Rabbit map. In particular, this justifies the observation of Oliva in [Ol]. A statement without the assumption $M \leq 3$ requires an additional automaton $\mathfrak{A}_V$ and shows that the "join" $\mathfrak{A}_E \cup \mathfrak{A}_V$ is identical to $\mathfrak{A}_T$ (see [IS2] for more details). The proofs of the results in the item (vi) use the idea of homotopy shadowing [IS1] and a "duality" between a directed segment and a tight path.

(vii) Iterated monodromy groups. In [Ne1] Volomydir Nekrashevych has developed a group-theoretic framework to describe the dynamics of branched partial self-covering, which led the solution to the so-called *twisted rabbit conjecture* [BN]. Throughout the item (vii) we assume that J_p is connected and p is expanding on J_p. Then, as in (vi) one can take a path-connected neighborhood W^0 of J_p so that $\iota_W, p : W^1 \to W^0$ is an expanding system, where $W^1 \equiv p^{-1}(W^0)$.

For the multivalued dynamical system $\mathfrak{W} = (W^0, W^1; \iota_W, p)$, one can define its pullbacks $\iota_W, p : W^n \to W^{n-1}$ so that the iterations $\iota_W^n, p^n : W^n \to W^0$ are well-defined. By the definition of W^m we see that $p : W^1 \to W^0$ is a covering of degree $d \geq 2$. Fix a base-point $b \in W^0$. We define $T^* \equiv \bigsqcup_{n=0}^{\infty} p^{-n}(b)$ and draw an arrow from $y \in p^{-n-1}(b)$ to $y' \in p^{-n}(b)$ whenever $p(y) = y'$. The directed rooted d-regular tree obtained in this way is called the *preimage tree* and denoted by T. Since $p : W^1 \to W^0$ is a covering, the fundamental group $\pi_1(W^0, b)$ acts on $p^{-n}(b)$ for each $n \geq 0$, hence on T. Let the homomorphism $\phi : \pi_1(W^0, b) \to \mathfrak{S}(T)$ be the action of $\pi_1(W^0, b)$ on T. Following Nekrashevych [Ne1, BGN] we define

Definition 1.16. *We call*

$$\mathrm{IMG}(\mathfrak{W}) \equiv \pi_1(W^0, b)/\mathrm{Ker}(\phi)$$

the iterated monodromy group for the multivalued dynamical system $\mathfrak{W} = (W^0, W^1; \iota_W, p)$.

Let Σ_d^n be the set of words of length $n \geq 0$ over Σ_d and put $\Sigma_d^* \equiv \bigsqcup_{n=0}^{\infty} \Sigma_d^n$, where Σ_d^0 consists of the empty word $\emptyset$. Fix a bijection $\Lambda : \Sigma_d \to p^{-1}(b) \subset W^1$ and a family of paths $\{l_\varepsilon\}_{\varepsilon \in \Sigma_d}$ where l_ε connects b to $\iota_W(\Lambda(\varepsilon))$ in W^0. For $n \geq 1$ and $\varepsilon_0 \cdots \varepsilon_n \in \Sigma_d^{n+1}$ we inductively define a path $l_{\varepsilon_0 \cdots \varepsilon_n}$ in W^0 as follows. Assume that $l_{\varepsilon_1 \cdots \varepsilon_n}$ is determined for any $\varepsilon_1 \cdots \varepsilon_n \in \Sigma_d^n$. We put

$$l_{\varepsilon_0 \varepsilon_1 \cdots \varepsilon_n} \equiv l_{\varepsilon_0} \cdot \iota_W(p^{-1}(l_{\varepsilon_1 \cdots \varepsilon_n})_{\Lambda(\varepsilon_0)}),$$

where $p^{-1}(l_{\varepsilon_1 \cdots \varepsilon_n})_{\Lambda(\varepsilon_0)}$ is the lift of $l_{\varepsilon_1 \cdots \varepsilon_n}$ by p whose initial point is $\Lambda(\varepsilon_0)$.

Given a path l, let $e(l)$ be its end point and put

$$\Lambda(\varepsilon_0 \varepsilon_1 \cdots \varepsilon_n) \equiv e(p^{-1}(l_{\varepsilon_1 \cdots \varepsilon_n})_{\Lambda(\varepsilon_0)}).$$

Since we can verify $p(\Lambda(\varepsilon_0 \cdots \varepsilon_n)) = \iota_W(\Lambda(\varepsilon_1 \cdots \varepsilon_n))$, the finite sequence:

$$\widetilde{\Lambda}(\varepsilon_0 \varepsilon_1 \cdots \varepsilon_n) \equiv (\Lambda(\varepsilon_0 \cdots \varepsilon_n), \Lambda(\varepsilon_1 \cdots \varepsilon_n), \ldots, \Lambda(\varepsilon_n))$$

gives a point in $p^{-n-1}(b)$. This defines $\widetilde{\Lambda} : \Sigma_d^{n+1} \to p^{-n-1}(b)$, which gives rise to an isomorphism:

$$\widetilde{\Lambda} : \Sigma_d^* \longrightarrow T^*,$$

where we set $\widetilde{\Lambda}(\emptyset) \equiv b$ (see Proposition 5.3 in [BGN]). The action of $\mathrm{IMG}(\mathfrak{W})$ on T^* induces an action on Σ_d^* which we call the *standard action* of $\mathrm{IMG}(\mathfrak{W})$ on Σ_d^*.

Definition 1.17. *We say that $\underline{\varepsilon} = (\varepsilon_n)_{n \geq 0}$ and $\underline{\varepsilon}' = (\varepsilon'_n)_{n \geq 0}$ in $\Sigma_d^{\mathbb{N}_0}$ are asymptotically equivalent and write $\underline{\varepsilon} \sim_{\mathrm{asym}} \underline{\varepsilon}'$ if there exists a finite set $F \subset \mathrm{IMG}(\mathfrak{W})$ so that one can find $\gamma_n \in F$ with*

$$(\varepsilon_0 \cdots \varepsilon_n)^{\gamma_n} = \varepsilon'_0 \cdots \varepsilon'_n$$

for any $n \geq 0$.

It is easy to see that the asymptotic equivalence forms an equivalence relation. The quotient space $\Sigma_d^{\mathbb{N}_0}/_{\sim_{\rm asym}}$ is called the *limit space* of $\mathrm{IMG}(\mathfrak{W})$. The shift map $\sigma : \Sigma_d^{\mathbb{N}_0} \to \Sigma_d^{\mathbb{N}_0}$ defines a factor map $\sigma/_{\sim_{\rm asym}} : \Sigma_d^{\mathbb{N}_0}/_{\sim_{\rm asym}} \to \Sigma_d^{\mathbb{N}_0}/_{\sim_{\rm asym}}$. Nekrashevych proved the following.

Theorem 1.18 (see Theorem 9.7 in [BGN])**.** *Let p be a polynomial of degree $d \geq 2$ and assume that J_p is connected and p is expanding on J_p. Then, $p : J_p \to J_p$ is topologically conjugate to the factor map $\sigma/_{\sim_{\rm asym}} : \Sigma_d^{\mathbb{N}_0}/_{\sim_{\rm asym}} \to \Sigma_d^{\mathbb{N}_0}/_{\sim_{\rm asym}}$.*

The action of $\mathrm{IMG}(\mathfrak{W})$ has the following significant property called the *self-similarily.*

Proposition 1.19 (Proposition 5.4 in [BGN])**.** *For every $g \in \mathrm{IMG}(\mathfrak{W})$ and $\varepsilon \in \Sigma_d$ there exist unique $g|_\varepsilon \in \mathrm{IMG}(\mathfrak{W})$ and $\varepsilon' \in \Sigma_d$ so that $(\varepsilon\underline{w})^g = \varepsilon'(\underline{w})^{g|_\varepsilon}$ holds for any word $\underline{w} \in \Sigma_d^*$.*

This property allows us to define two maps:

$$\pi : \Sigma_d \times \mathrm{IMG}(\mathfrak{W}) \longrightarrow \mathrm{IMG}(\mathfrak{W})$$

by $\pi(\varepsilon, g) \equiv g|_\varepsilon$ and

$$\lambda : \Sigma_d \times \mathrm{IMG}(\mathfrak{W}) \longrightarrow \Sigma_d$$

by $\lambda(\varepsilon, g) \equiv \varepsilon'$. Given a word $\varepsilon_0 \cdots \varepsilon_n \in \Sigma_d^{n+1}$ we inductively define $g|_{\varepsilon_0\cdots\varepsilon_n} \equiv (g|_{\varepsilon_0\cdots\varepsilon_{n-1}})|_{\varepsilon_n}$.

The *nucleus* of $\mathrm{IMG}(\mathfrak{W})$ is defined as

$$\mathcal{N}_{\mathrm{IMG}(\mathfrak{W})} \equiv \bigcup_{g\in G} \bigcap_{n\in\mathbb{N}} \bigcup_{|\underline{w}|\geq n} \{g|_{\underline{w}}\},$$

where $|\underline{w}|$ denotes the length of the word $\underline{w}$. It can be shown that the nucleus $\mathcal{N}_{\mathrm{IMG}(\mathfrak{W})}$ is finite when the polynomial p is expanding on J_p (see the first half of Theorem 9.7 in [BGN]). Moreover, the above two maps restrict to the nucleus to obtain $\pi : \Sigma_d \times \mathcal{N}_{\mathrm{IMG}(\mathfrak{W})} \to \mathcal{N}_{\mathrm{IMG}(\mathfrak{W})}$ and $\lambda : \Sigma_d \times \mathcal{N}_{\mathrm{IMG}(\mathfrak{W})} \to \Sigma_d$. This gives a directed labeled graph as follows; the vertex set is $\mathcal{N}_{\mathrm{IMG}(\mathfrak{W})}$ and we draw an arrow from $g \in \mathcal{N}_{\mathrm{IMG}(\mathfrak{W})}$ to $g' \in \mathcal{N}_{\mathrm{IMG}(\mathfrak{W})}$ iff $g' = \pi(\varepsilon, g)$ holds for some $\varepsilon \in \Sigma_d$ and label the arrow as $(\varepsilon, \lambda(\varepsilon, g))$.

Definition 1.20. *The directed labeled graph obtained in this way is called the IMG automaton of $\mathfrak{W}$ and denoted by $\mathfrak{A}_{\mathrm{IMG}}(\mathfrak{W})$.*

Let $\mathfrak{A}_{\mathrm{IMG}} = \mathfrak{A}_{\mathrm{IMG}}(\mathfrak{W})$ be the IMG automaton of $\mathfrak{W}$. As for a tight automaton this defines an equivalence relation $\sim_{\mathfrak{A}_{\mathrm{IMG}}}$ in $\Sigma_d^{\mathbb{N}_0}$. In Proposition 9.2 of [BGN] it was shown that the asymptotic equivalence $\sim_{\rm asym}$ and $\sim_{\mathfrak{A}_{\mathrm{IMG}}}$ are identical. Therefore, Theorem 1.18 yields

Corollary 1.21 (Nekrashevych)**.** *Let p be a polynomial of degree $d \geq 2$ and assume that J_p is connected and p is expanding on J_p. Then, $p : J_p \to J_p$ is topologically conjugate to the factor map $\sigma/_{\sim_{\mathfrak{A}_{\mathrm{IMG}}}} : \Sigma_d^{\mathbb{N}_0}/_{\sim_{\mathfrak{A}_{\mathrm{IMG}}}} \to \Sigma_d^{\mathbb{N}_0}/_{\sim_{\mathfrak{A}_{\mathrm{IMG}}}}$.*

See [Ne1, BN, BDN] for more details. In [IS2] we plan to discuss the relationship between the tight automata in (vi) and the IMG automata in (vii). Note that a polynomial diffeomorphism of $\mathbb{C}^2$ can not be a covering and can not be expanding in a neighborhood of the Julia set. Therefore, formulating iterated monodromy groups for such class of dynamical systems is not obvious (see [I3] for more details).

(viii) Monodromy representation on shift space. Let $\sigma : \Sigma_d^{\mathbb{N}_0} \to \Sigma_d^{\mathbb{N}_0}$ be the shift map on the space of one-sided symbol sequences with d symbols. Recall that the space $\Sigma_d^{\mathbb{N}_0}$ inherits the product topology. A *shift automorphism* of degree d is a homeomorphism $\tau : \Sigma_d^{\mathbb{N}_0} \to \Sigma_d^{\mathbb{N}_0}$ which commutes with the shift map $\sigma : \Sigma_d^{\mathbb{N}_0} \to \Sigma_d^{\mathbb{N}_0}$, i.e. $\sigma \circ \tau = \tau \circ \sigma$. Denote by $\mathrm{Aut}(\Sigma_d^{\mathbb{N}_0}, \sigma)$ the space of all shift automorphisms of degree d. This space forms a group under composition.

Any polynomial of degree $d \geq 2$ is affine conjugate to a polynomial of the form $p(z) = z^d + a_{d-2}z^{d-2} + \cdots + a_0$. Below we identify p with the point $(a_{d-2}, \ldots, a_0) \in \mathbb{C}^{d-1}$. The *connectedness locus* is defined as

$$\mathcal{M}_d \equiv \big\{p \in \mathbb{C}^{d-1} : J_p \text{ is connected}\big\} = \big\{p \in \mathbb{C}^{d-1} : \mathrm{Crit}(p) \subset K_p\big\}$$

and the *shift locus* is defined as

$$\mathcal{S}_d \equiv \big\{p \in \mathbb{C}^{d-1} : \mathrm{Crit}(p) \cap K_p = \emptyset\big\}.$$

By using the Poincaré metric one can easily show that for $p \in \mathcal{S}_d$, the restriction $p : J_p \to J_p$ is expanding and topologically conjugate to $\sigma : \Sigma_d^{\mathbb{N}_0} \to \Sigma_d^{\mathbb{N}_0}$. Note that $\mathcal{M}_2 \sqcup \mathcal{S}_2 = \mathbb{C}$ holds, but $\mathcal{M}_d \sqcup \mathcal{S}_d$ does not coincide with $\mathbb{C}^{d-1}$ for $d > 2$.

In order to study the topology of the locus $\mathcal{S}_d$, Blanchard–Devaney–Keen [BDK] introduced the following homomorphism[3]. Fix $p_* \in \mathcal{S}_d$, $p_*(z) = z^d + a_0$ with $|a_0|$ sufficiently large and choose a loop $\gamma : [0,1] \to \mathcal{S}_d$ with $\gamma(0) = \gamma(1) = p_*$. Since $J_{\gamma(t)}$ is a Cantor set and $p = \gamma(t)$ is expanding on $J_p = J_{\gamma(t)}$ for all $t \in [0,1]$, every point in $J_{\gamma(0)} = J_{p_*}$ uniquely continues to a point in $J_{\gamma(1)} = J_{p_*}$. In particular, this defines a homeomorphism $\rho_d(\gamma) : J_{p_*} \to J_{p_*}$. It is easy to see that $\rho_d(\gamma)$ commutes with the shift map σ on $\Sigma_d^{\mathbb{N}_0}$. Therefore, we have a homomorphism:

$$\rho_d : \pi_1(\mathcal{S}_d, p_*) \longrightarrow \mathrm{Aut}(\Sigma_d^{\mathbb{N}_0}, \sigma)$$

satisfying $\rho_d(\gamma_1 \cdot \gamma_2) = \rho_d(\gamma_2)\rho_d(\gamma_1)$. We call ρ_d the *monodromy representation* of $\pi_1(\mathcal{S}_d, p_*)$.

Theorem 1.22 (Blanchard–Devaney–Keen [BDK])**.** *The monodromy representation ρ_d is surjective for any $d \geq 2$.*

The proof relies on the quasiconformal surgery of polynomials and the fact that an efficient system of generators for $\mathrm{Aut}(\Sigma_d^{\mathbb{N}_0}, \sigma)$ is known [As] (compare with the group of shift automorphisms $\mathrm{Aut}(\Sigma_2^{\mathbb{Z}}, \sigma)$ on *two-sided* symbol sequences in Subsection 7.1).

(ix) Dynamics-parameter correspondence. We consider the quadratic family $p_c(z) = z^2 + c$ ($c \in \mathbb{C}$) and discuss its dynamics-parameter correspondence discovered by Douady–Hubbard [DH] (see also [M3]). Below we write $J_c \equiv J_{p_c}$, $K_c \equiv K_{p_c}$, $\varphi_c \equiv \varphi_{p_c}$, $R_c(\theta) \equiv R_{p_c}(\theta)$ and $G_c(z) \equiv G_{p_c}(z)$. Let $U_c \equiv \{z \in \mathbb{C} : G_c(z) > G_c(0)\}$. We then see that $U_c \cup \{\infty\}$ is a simply connected domain in the Riemann sphere for any $c \in \mathbb{C}$. Therefore, one can extend φ_c to a holomorphic function:

$$\varphi_c : U_c \longrightarrow \mathbb{C} \setminus \overline{\Delta}.$$

The *Mandelbrot set* $\mathcal{M}$ is defined as

$$\mathcal{M} \equiv \mathcal{M}_2 = \big\{c \in \mathbb{C} : J_c \text{ is connected}\big\} = \big\{c \in \mathbb{C} : 0 \in K_c\big\}.$$

This leads to the following dichotomy.

- When $c \in \mathcal{M}$ (i.e. J_c is connected), we have $G_c(0) = 0$ by Corollary 1.2 and hence $U_c = \mathbb{C} \setminus K_c$. Therefore, φ_c defines a conformal isomorphism $\varphi_c : \mathbb{C} \setminus K_c \to \mathbb{C} \setminus \overline{\Delta}$.
- When $c \notin \mathcal{M}$ (i.e. J_c is disconnected), we have $G_c(0) > 0$ by Corollary 1.2. This yields $G_c(c) = G_c(p_c(0)) = 2G_c(0) > G_c(0)$ and hence $c \in U_c$. In particular, $\varphi_c(c)$ is well-defined.

Theorem 1.23 (Douady–Hubbard [DH])**.** *The map:*

$$\Phi : \mathbb{C} \setminus \mathcal{M} \ni c \longmapsto \varphi_c(c) \in \mathbb{C} \setminus \overline{\Delta}$$

gives a conformal isomorphism. In particular, the Mandelbrot set $\mathcal{M}$ is connected.

[3]Connectivity of $\mathcal{S}_d$ is implicitly assumed in [BDK]. Its proof can be found in Corollary 6.2 of [DP].

People often call $\Phi(c) \equiv \varphi_c(c)$ the "magic formula" for the quadratic family p_c. Thanks to this theorem, we can define the external rays for $\mathcal{M}$.

Definition 1.24. *We call $R_{\mathcal{M}}(\theta) \equiv \{\Phi^{-1}(re^{2\pi i\theta}) : r > 1\}$ the external ray of angle $\theta \in \mathbb{T}$ for the Mandelbrot set $\mathcal{M}$.*

We say that an external ray $R_{\mathcal{M}}(\theta)$ *lands on a point* $c \in \partial\mathcal{M}$ if the limit $\lim_{r\downarrow 1} \Phi^{-1}(re^{2\pi i\theta})$ exists and equals to c.

A connected component of $\{c \in \mathcal{M} : p_c \text{ is expanding on } J_c\}$ is called a *hyperbolic component* of $\mathcal{M}$. An example of a hyperbolic component is the *Main Cardioid* denoted by $\heartsuit$ consisting of the parameters $c \in \mathbb{C}$ so that p_c has an attractive fixed point.

Let H be a hyperbolic component of $\mathcal{M}$ and let $c \in H$. By Theorem 1.6 we see that the orbit of 0 converges to a unique attractive cycle A of certain period $k(H) \geq 1$. Thanks to the chain rule, the multiplier $(p_c^{k(H)})'(a)$ of the cycle A is independent of the choice of $a \in A$.

Theorem 1.25 (Douady–Hubbard [DH])**.** *Let H be a hyperbolic component of $\mathcal{M}$. Then,*

$$\Lambda_H : H \ni c \longmapsto (p_c^{k(H)})'(a) \in \Delta$$

gives a conformal isomorphism.

We call $c(H) \equiv \Lambda_H^{-1}(0) \in H$ the *center* of H and $r_{\mathcal{M}}(H) \equiv \lim_{\lambda\uparrow 1} \Lambda_H^{-1}(\lambda) \in \overline{H}$ the *root* of H in the parameter space. Set

$$\Theta_{\mathcal{M}}(H) \equiv \big\{\theta \in \mathbb{T} : R_{\mathcal{M}}(\theta) \text{ lands on } r_{\mathcal{M}}(H)\big\}.$$

Theorem 1.26 (Douady–Hubbard [DH])**.** *For any hyperbolic component H different from the Main Cardioid $\heartsuit$, there are exactly two angles $0 < \theta_H^- < \theta_H^+ < 1$ so that $\Theta_{\mathcal{M}}(H) = \{\theta_H^-, \theta_H^+\}$.*

For convenience we set $\theta_\heartsuit^- \equiv 0$ and $\theta_\heartsuit^+ \equiv 1$ and therefore $\Theta_{\mathcal{M}}(\heartsuit) = \{0\} \subset \mathbb{T}$.

Now let us describe a surprising dynamics-parameter correspondence. Let H be a hyperbolic component of $\mathcal{M}$. Then, 0 is a superattractive periodic point of period $k(H)$ for $p_{c(H)}$. Let $F_{c(H)}$ be the Fatou component of $p_{c(H)}$ containing the critical value $c(H)$ of $p_{c(H)}$. By Böttcher's theorem, there exists a unique conformal isomorphism:

$$\chi_{c(H)} : F_{c(H)} \longrightarrow \Delta$$

which conjugates $p_{c(H)}^{k(H)} : F_{c(H)} \to F_{c(H)}$ to $\Delta \ni z \mapsto z^2 \in \Delta$ and $\chi'_{c(H)}(c(H)) = 1$. We call $r(F_{c(H)}) \equiv \lim_{z\uparrow 1} \chi_{c(H)}^{-1}(z) \in \overline{F_{c(H)}}$ the *root* of $F_{c(H)}$ in the dynamical space. Set

$$\Theta(F_{c(H)}) \equiv \big\{\theta \in \mathbb{T} : R_{c(H)}(\theta) \text{ lands on } r(F_{c(H)})\big\}.$$

The next claim builds a "bridge" between the dynamical space and the parameter space.

Theorem 1.27 (Douady–Hubbard [DH])**.** *For any hyperbolic component H of $\mathcal{M}$, we have $\Theta(F_{c(H)}) \supset \Theta_{\mathcal{M}}(H)$.*

Here is a list of examples:

- When $H = \heartsuit$ is the Main Cardioid, we have $\Theta(F_{c(\heartsuit)}) = \Theta_{\mathcal{M}}(\heartsuit) = \{0\}$.
- When H is the Basilica component, we have $\Theta(F_{c(H)}) = \Theta_{\mathcal{M}}(H) = \{1/3, 2/3\}$.
- When H is the Airplane component, we have $\Theta(F_{c(H)}) = \Theta_{\mathcal{M}}(H) = \{3/7, 4/7\}$.
- When H is the Rabbit component, we have $\{1/7, 2/7, 4/7\} = \Theta(F_{c(H)}) \supset \Theta_{\mathcal{M}}(H) = \{1/7, 2/7\}$.

(x) Real quadratic family. In this item (x) we discuss an application of complex methods to real dynamics. A quadratic map p_c is said to be *real* if $c \in \mathbb{R}$. A real map p_c is called a *hyperbolic horseshoe on* $\mathbb{R}$ if the restriction of $p_c|_{\mathbb{R}} : \mathbb{R} \to \mathbb{R}$ to its non-wandering set is expanding and topologically conjugate to the shift map $\sigma : \Sigma_2^{\mathbb{N}_0} \to \Sigma_2^{\mathbb{N}_0}$. We also know that $0 \leq h_{\mathrm{top}}(p_c|_{\mathbb{R}}) \leq \log 2$ holds for all $c \in \mathbb{R}$. Therefore, we say that p_c *attains the maximal entropy on* $\mathbb{R}$ if $h_{\mathrm{top}}(p_c|_{\mathbb{R}}) = \log 2$.

Theorem 1.28. *A real quadratic map p_c is a hyperbolic horseshoe on $\mathbb{R}$ iff $c < -2$, and p_c attains the maximal entropy on $\mathbb{R}$ iff $c \leq -2$.*

In particular, the boundary of the hyperbolic horseshoe locus and the maximal entropy locus for p_c coincide and equal to the one-point set $\{-2\}$. The proof of the above theorem is supplied by using Poincaré metrics and the symmetry of p_c with respect to the complex conjugation.

2. Preliminaries on polynomial diffeomorphisms of $\mathbb{C}^2$

In this section we recall some preliminaries on polynomial diffeomorphisms of $\mathbb{C}^2$ and propose ten problems related to the ten items presented in the previous section.

2.1. **Classification.** A polynomial map $f : \mathbb{C}^2 \to \mathbb{C}^2$ is called a *polynomial diffeomorphim* of $\mathbb{C}^2$ if it has a polynomial inverse. Examples of polynomial diffeomorphims of $\mathbb{C}^2$ are an *affine map*:

$$\alpha : (x, y) \longmapsto (a_1x + b_1y + c_1, a_2x + b_2y + c_2)$$

where $a_1b_2 - a_2b_1 \neq 0$, an *elementary map*:

$$\beta : (x, y) \longmapsto (ax + c, p(x) + by)$$

where $p(x)$ is a polynomial of degree $d \geq 2$ and $ab \neq 0$, and a *generalized Hénon map*:

$$f_{p,b} : (x, y) \longmapsto (p(x) - by, x)$$

where $p(x)$ is a polynomial of degree $d \geq 2$ and $b \in \mathbb{C}^\times \equiv \mathbb{C} \setminus \{0\}$.

Let $\mathrm{Poly}(\mathbb{C}^2)$ be the space of polynomial diffeomorphisms of $\mathbb{C}^2$. This forms a group by the composition of two maps and the conjugacy classes can be classified into three types.

Theorem 2.1 (Friedland–Milnor [FM])**.** *Any $f \in \mathrm{Poly}(\mathbb{C}^2)$ is conjugate in the group $\mathrm{Poly}(\mathbb{C}^2)$ to either*

(1) *an affine map,*
(2) *an elementary map, or*
(3) *a composition of finitely many generalized Hénon maps.*

The proof of Theorem 2.1 is based on a classical result of Jung [J] which claims that the group $\mathrm{Poly}(\mathbb{C}^2)$ is generated by the affine maps and the elementary maps. One may wonder if an analogous result holds for the group of polynomial diffeomorphisms of $\mathbb{C}^3$. In his 1972 paper [N], Masayoshi Nagata[4] proposed the map:

$$(x, y, z) \longmapsto (x + (x^2 - yz)z, y + 2(x^2 - yz)x + (x^2 - yz)^2z, z)$$

as a possible counterexample to this analogy. More than 30 years later, Shestakov and Umirbaev [SU] finally showed Nagata's conjecture in the affirmative, i.e. the Nagata map is not contained in the subgroup of $\mathrm{Poly}(\mathbb{C}^3)$ generated by affine maps and the elementary maps.

[4]He was nicknamed "Mr. Counterexample" with admiration. He also gave a counterexample to the 14th problem of David Hilbert. See the paper by M. Miyanishi, *Masayoshi Nagata (1927–2008) and his mathematics*, Kyoto J. Math. **50** (2010), no. 4, 645–659.

It is easy to see that the dynamics of the cases (a) and (b) in Theorem 2.1 is simple, so the only dynamically interesting case is (c). Therefore, we will hereafter treat a map of the form:

$$f = f_{p_1,b_1} \circ \cdots \circ f_{p_k,b_k}.$$

Note that for a map of this form, the Jacobian determinant is given by $\det(Df) = b_1 \cdots b_k$. We define $d \equiv d_1 \cdots d_k$ and call it the *degree* of f, where $d_i \equiv \deg p_i$. The next result indicates that the maps in this class exhibit rich dynamics.

Theorem 2.2 (Friedland–Milnor [FM], Smillie [S1])**.** *We have* $h_{\mathrm{top}}(f) = \log d$.

Let us define the *forward/backward filled-Julia sets* of f as

$$K^{\pm} \equiv \big\{(x,y) \in \mathbb{C}^2 : \{f^{\pm n}(x,y)\}_{n \geq 0} \text{ is bounded}\big\},$$

the *forward/backward Julia sets* of f as $J^{\pm} \equiv \partial K^{\pm}$. We also define $K_f \equiv K^+ \cap K^-$. We put $J = J_f \equiv J^+ \cap J^-$ and call it the *Julia set*[5] of f.

As a comparison with the quadratic family p_c we consider the *complex Hénon family*:

$$f_{c,b} : (x,y) \longmapsto (x^2 + c - by, x)$$

defined on $\mathbb{C}^2$, where $(c,b) \in \mathbb{C} \times \mathbb{C}^{\times}$ is a parameter. Let us call $f_{c,b}$ *real* if $(c,b) \in \mathbb{R} \times \mathbb{R}^{\times}$. When $f_{c,b}$ is real, the dynamical system $f_{c,b} : \mathbb{R}^2 \to \mathbb{R}^2$ is well-defined.

2.2. **Ten problems.** Based on the ten items discussed in Section 1, we propose the following ten problems for polynomial diffeomorphisms f of $\mathbb{C}^2$ or the Hénon family.

Problems:

(i) Define "dynamical critical points" of f. Related it to the connectivity of the Julia set.
(ii) When the Julia set is connected, define the notion of external rays.
(iii) Establish a criterion for hyperbolicity of f on the Julia set and construct examples.
(iv) When the Julia set is connected and hyperbolic, describe it as a quotient space of a "simple" space like a circle.
(v) Define the notion of a Hubbard tree for f. Prove that it reconstructs the Julia set.
(vi) Construct a (tight) automaton for f. Prove that it reconstructs the Julia set.
(vii) Define the notion of an iterated monodromy group for f. Prove that its limit space is homeomorphic to the Julia set.
(viii) Study the monodromy representation for the complex Hénon family. Is it surjective?
(ix) Establish a dynamics-parameter correspondence for the complex Hénon family.
(x) Characterize the hyperbolic horseshoe locus and the maximal entropy locus for the real Hénon family.

In the rest of this article, we will discuss the above problems for polynomial diffeomorphisms of $\mathbb{C}^2$ or for the Hénon family. Section 3 is devoted to Problems (i), (ii) and (iv) where the results are obtained in [$\mathrm{BS}_{\mathbb{C}}5$, $\mathrm{BS}_{\mathbb{C}}6$, $\mathrm{BS}_{\mathbb{C}}7$]. Section 4 is the "Intermezzo" of this article and noting to do with the problem list above, where we discuss an application of the *convergence theorem of currents* [$\mathrm{BS}_{\mathbb{C}}1$, $\mathrm{BS}_{\mathbb{C}}2$, $\mathrm{BS}_{\mathbb{C}}3$] to curious objects in general topology called the *Lakes of Wada*. Section 5 discusses Problem (iii) and we present a construction of a hyperbolic Hénon map with intrinsically two-dimensional dynamics in [I1]. The following Section 6 is dedicated to Problems (v), (vi) and (vii) where we present some results in [I2, I3]. Problems (viii) and (ix) are discussed in Section 7 and two conjectures from [L] are presented. Finally in Section 8 we consider Problem (x) and present some related results in [$\mathrm{BS}_{\mathbb{R}}1$, $\mathrm{BS}_{\mathbb{R}}2$, AI, AIT].

[5] We are also interested in the set J_f^* defined as the support of the unique maximal entropy measure [$\mathrm{BS}_{\mathbb{C}}1$, BLS1] (see Subsection 3.1). We see that $J_f^* \subset J_f$ holds in general, and $J_f^* = J_f$ can be shown when f is hyperbolic [$\mathrm{BS}_{\mathbb{C}}1$].

3. Connectivity of the Julia sets and their external rays

This section is devoted to Problems (i), (ii) and (iii). Recall that $J_f = J_{f^{-1}}$ holds. Therefore, so far as we discuss the connectivity of J_f, we may assume $|\det(Df)| \leq 1$.

3.1. **Connectivity.** We first introduce the following notion.

Definition 3.1. *We say that the Julia set J_f is unstably connected with respect to a saddle periodic point q if $W^u(q) \cap J_f$ has no compact components.*

The following fundamental theorem states that the connectivity of J_f can be detected through the complex one-dimensional slice of J_f by some/any unstable manifold.

Theorem 3.2 (Bedford–Smillie [BS$_{\mathbb{C}}$6])**.** *Let $|\det(Df)| \leq 1$. Then, the following are equivalent:*

(1) *J_f is connected,*
(2) *J_f is unstably connected with respect to some saddle periodic point q,*
(3) *J_f is unstably connected with respect to any saddle periodic point q.*

Indeed, Bedford–Smillie showed (Theorem 0.1 in [BS$_{\mathbb{C}}$6]) that (2) and (3) above are equivalent without $|\det(Df)| \leq 1$, and called a map f satisfying the conditions *unstably connected*.

Our next task is to restate the conditions (2) and (3) in the theorem above so that they can be verified by computer experiments. To do this, let us introduce the Green functions of f as

$$G^{\pm}(x,y) \equiv \lim_{n\to+\infty} \frac{1}{d^n} \log^+ \|f^{\pm n}(x,y)\|.$$

One can see that $G^{\pm}(x,y)$ are continuous and plurisubharmonic and satisfy $G^{\pm}(f(x,y)) = d^{\pm 1} \cdot G^{\pm}(x,y)$ on $\mathbb{C}^2$, pluriharmonic on $\mathbb{C}^2 \setminus K^{\pm}$ and $G^{\pm}(x,y) > 0$ iff $(x,y) \in \mathbb{C}^2 \setminus K^{\pm}$. Therefore, $\mu^{\pm} \equiv \frac{1}{2\pi} dd^c G^{\pm}$ define positive $(1,1)$-currents on $\mathbb{C}^2$.

Define an analogy of the Böttcher coordinate:

$$\varphi^+(x,y) \equiv \lim_{n\to+\infty} (\pi_x \circ f^n(x,y))^{\frac{1}{d^n}}$$

(by choosing an appropriate d^n-th root) for $(x,y) \in V_R^+ \equiv \{(x,y) \in \mathbb{C}^2 : |x| > R, |x| > |y|\}$, where π_x is the projection to the x-axis and $R > 0$ large. Note that we have $\varphi^+(x,y)/x \to 1$ as $|x| \to \infty$ for every fixed y and $G^+(x,y) = \log|\varphi^+(x,y)|$ for $(x,y) \in V_R^+$.

It was observed in [BS$_{\mathbb{C}}$6] that, when we try to extend φ^+ along $J^- \setminus K^+$, an obstruction is the critical points of G^+ on $W^u(q) \setminus K^+$. This leads to define the *dynamical critical set* as

$$\mathcal{C}^u \equiv \bigcup_{q\in\mathcal{R}} \mathrm{Crit}(G^+; q),$$

where $\mathcal{R}$ denotes the set of Pesin regular points in J_f (e.g. the saddle periodic points) and

$$\mathrm{Crit}(G^+; q) \equiv \left\{(x,y) \in W^u(q) \setminus K^+ : (x,y) \text{ is a critical point of } G^+|_{W^u(q)\setminus K^+}\right\}$$

for $q \in \mathcal{R}$ (see [BS$_{\mathbb{C}}$5]). These critical points represent tangencies between the lamination of J^- by unstable manifolds and the foliation on $\mathbb{C}^2 \setminus K^+$ defined by the holomorphic 1-form ∂G^+. By the laminar structure of μ^-, it induces a measure μ_c^- on the dynamical critical set $\mathcal{C}^u$. This measure yields a formula for the Lyapunov exponent of f [BS$_{\mathbb{C}}$5]:

$$\Lambda_\mu(f) = \log d + \int_{\{1\leq G^+<d\}} G^+ d\mu_c^-$$

with respect to the unique maximal entropy measure $\mu \equiv \mu^+ \wedge \mu^-$ (see [BLS1] for more details), where $\{1 \leq G^+ < d\}$ is a fundamental domain for $\mathcal{C}^u$. This formula generalizes the corresponding one-dimensional formula given in [P] and was a key step in the proof of Theorem 3.2.

The following claim has been obtained as a combination of an argument by R. Dujardin and ones in [BS$_{\mathbb{C}}$6]. For the proof we refer to [I4].

Theorem 3.3 (Bedford–Smillie [BS$_{\mathbb{C}}$6], Dujardin)**.** *Let* $|\det(Df)| \leq 1$ *and let* q *be any saddle periodic point of* f*. Then, the following holds.*

(1) J_f *is connected iff* K_f *is connected.*
(2) J_f *is unstably connected with respect to* q *iff* $\mathrm{Crit}(G^+; q) = \emptyset$.

In particular, Theorems 3.2 and 3.3 yield

Corollary 3.4. *Let* $|\det(Df)| \leq 1$ *and let* q *be any saddle periodic point of* f*. Then, the Julia set* J_f *is connected iff* $\mathrm{Crit}(G^+; q) = \emptyset$.

This justifies the algorithm of the program *SaddleDrop* [SD] to draw the connectedness locus of the complex Hénon family. SaddleDrop was written around 2000 by Karl Papadantonakis, then an undergraduate student at Cornell. The procedure to use SaddleDrop is as follows.

- **Step 1:** Choose $(c_0, b_0) \in \mathbb{C} \times \mathbb{C}^\times$ with $|b_0| \leq 1$.
- **Step 2:** Compute $W^u(q)$ of a saddle fixed point q for f_{c_0,b_0}.
- **Step 3:** Draw the set $K^+ \cap W^u(q)$ as well as some equi-potential curves of $G^+|_{W^u(q)}$ for f_{c_0,b_0} in the uniformized coordinate $\mathbb{C} \cong W^u(q)$.
- **Step 4:** By looking at equi-potential curves of $G^+|_{W^u(q)}$ in $\mathbb{C} \cong W^u(q)$, we try to find an element in $\mathrm{Crit}(G^+; q)$.
- **Step 5:** If we can find a critical point, click it; then SaddleDrop traces all parameters $(c, b_0) \in \mathbb{C} \times \mathbb{C}^\times$ to which a continuation of the chosen critical point survives. Repeat this procedure for as many points in $\mathrm{Crit}(G^+; q)$ as you can find.
- **Step 6:** Choose a new $c_0 \in \mathbb{C}$ (by keeping $b_0 \in \mathbb{C}^\times$) which was not traced from any of the previous choices and return to Step 2.

According to Corollary 3.4, the algorithm above yields the following claims.

(i) If (c, b_0) can be traced from some (c_0, b_0) through a critical point, then we are sure (up to numerical error) that the Julia set of f_{c,b_0} is disconnected.
(ii) If (c, b_0) can not be traced from any (c_0, b_0) through any critical points we found, then the Julia set of f_{c,b_0} is "presumably" connected.

The claim (ii) is valid at best "presumably" because we do not know if the intersection of the complement of the connectedness locus with the slice $\{(c, b) \in \mathbb{C} \times \mathbb{C}^\times : b = b_0\}$ is connected and because it is not theoretically possible to do Step 5 in the algorithm for *all* points in $\mathrm{Crit}(G^+; q)$ which could be an infinite set. Modulo these issues, it seems that SaddleDrop may give a good approximation of the connectedness locus for the complex Hénon family. We refer to [Ko1] for several pictures obtained by SaddleDrop as well as some other issues related to the algorithm.

3.2. **External rays.** In this subsection we define the notion of external rays and discuss a topological model for a connected and hyperbolic Julia set. We say that a polynomial diffeomorphism f of $\mathbb{C}^2$ is *hyperbolic* if its Julia set J_f is a hyperbolic set for f.

Let $p_d : \mathbb{C} \setminus \overline{\Delta} \to \mathbb{C} \setminus \overline{\Delta}$ be the monomial map $p_d(z) \equiv z^d$ of degree $d \geq 2$. The projective limit of $p_d : \mathbb{C} \setminus \overline{\Delta} \to \mathbb{C} \setminus \overline{\Delta}$ denoted as $\mathbb{S}_d^{\mathbb{C}}$ together with the shift map on it $\hat{p}_d : \mathbb{S}_d^{\mathbb{C}} \to \mathbb{S}_d^{\mathbb{C}}$ is called the *complex solenoid* of degree d (denoted as Σ_+ in [BS$_{\mathbb{C}}$7]). Similarly, let $\delta_d : \mathbb{T} \to \mathbb{T}$ be the map given by $\delta_d(\theta) \equiv d \cdot \theta$. The projective limit of $\delta_d : \mathbb{T} \to \mathbb{T}$ denoted as $\mathbb{S}_d^{\mathbb{R}}$ together with the shift map on it $\hat{\delta}_d : \mathbb{S}_d^{\mathbb{R}} \to \mathbb{S}_d^{\mathbb{R}}$ is called the *real solenoid* of degree d (denoted as Σ_0 in [BS$_{\mathbb{C}}$7]). In the context of complex Hénon maps, real solenoids had appeared earlier, although in quite a different form, in [Hu, HO1] as "the dynamics at infinity".

The next theorem states that, when J_f is connected and f is hyperbolic, one can define the notion of *external rays* in $J^- \setminus K^+$ which are parameterized by the "space of angles" $\mathbb{S}_d^{\mathbb{R}}$.

Theorem 3.5 (Bedford–Smillie [BS$_{\mathbb{C}}$7]). *Let $|\det(Df)| \leq 1$. If J_f is connected and f is hyperbolic, there exists a homeomorphism:*

$$\Psi \,:\, \mathbb{S}_d^{\mathbb{C}} \longrightarrow J^- \setminus K^+$$

which conjugates the shift map $\hat{p}_d : \mathbb{S}_d^{\mathbb{C}} \to \mathbb{S}_d^{\mathbb{C}}$ to $f : J^- \setminus K^+ \to J^- \setminus K^+$.

Indeed, it is shown in [BS$_{\mathbb{C}}$6] that, if $|\det(Df)| \leq 1$ and J_f is connected, the holomorphic function $\varphi^+ : V_R^+ \to \mathbb{C} \setminus \{|z| \leq R\}$ extends to $\varphi^+ : J^- \setminus K^+ \to \mathbb{C} \setminus \overline{\Delta}$. Hence one can define

$$\Phi \,:\, J^- \setminus K^+ \ni (x, y) \longmapsto (\varphi^+ \circ f^n(x, y))_{n \in \mathbb{Z}} \in \mathbb{S}_d^{\mathbb{C}}.$$

When moreover f is hyperbolic, $\Phi : J^- \setminus K^+ \to \mathbb{S}_d^{\mathbb{C}}$ is a finite covering [BS$_{\mathbb{C}}$7]. By modifying the "local inverse map" of Φ appropriately, we obtain the homeomorphism $\Psi : \mathbb{S}_d^{\mathbb{C}} \to J^- \setminus K^+$ in Theorem 3.5 (see Section 4 in [BS$_{\mathbb{C}}$7]). It is still an open question if Φ itself is a homeomorphism (see a remark just after Corollary 4.2 of [BS$_{\mathbb{C}}$7]). If it is the case, we have $\Psi = \Phi^{-1}$.

Thanks to the theorem above one can define (when f is hyperbolic) the notion of *external rays* in $J^- \setminus K^+$ as the push-forward of the rays in $\mathbb{S}_d^{\mathbb{C}}$ by Ψ. Hyperbolicity of f also implies that every external ray has a well-defined landing point in J_f. In particular, we have

Corollary 3.6 ([BS$_{\mathbb{C}}$7]). *Let $|\det(Df)| \leq 1$. If J_f is connected and f is hyperbolic, Ψ extends to a surjective semiconjugacy $\Psi : \mathbb{S}_d^{\mathbb{R}} \to J_f$ from $\hat{\delta}_d : \mathbb{S}_d^{\mathbb{R}} \to \mathbb{S}_d^{\mathbb{R}}$ to $f : J_f \to J_f$.*

In particular, $f : J_f \to J_f$ is conjugate to the factor $\hat{\delta}_d/_{\sim_{\mathrm{BS}}} : \mathbb{S}_d^{\mathbb{R}}/_{\sim_{\mathrm{BS}}} \to \mathbb{S}_d^{\mathbb{R}}/_{\sim_{\mathrm{BS}}}$, where we define $\underline{\theta} \sim_{\mathrm{BS}} \underline{\theta}'$ iff $\Psi(\underline{\theta}) = \Psi(\underline{\theta}')$ for $\underline{\theta}, \underline{\theta}' \in \mathbb{S}_d^{\mathbb{R}}$. The nature of $\sim_{\mathrm{BS}}$ is, however, still mysterious (cf. the thesis of Oliva [Ol]) and we will discuss this issue in Section 6.

4. Fatou–Bieberbach domains and Lakes of Wada in $\mathbb{C}^2$

In this survey article we focus on combinatorial and topological aspects of the dynamics. An important topic we miss here is potential theoretic and ergodic approach which has been extensively studied in a series of papers [BS$_{\mathbb{C}}$1, BS$_{\mathbb{C}}$2, BS$_{\mathbb{C}}$3, BLS1, BLS2] and also in [FS].

4.1. Lakes of Wada.

First we remark that as a consequence of the convergence theorem of currents, Bedford and Smillie obtained the following curious result.

Theorem 4.1 (Bedford–Smillie [BS$_{\mathbb{C}}$2]). *For any attractive basin B for f, we have $\partial B = J^+$.*

This result reminds us the so-called *Lakes of Wada*; mutually disjoint three domains in the plane which possess common boundary. Such a curious example was first constructed in an article of Kunizô Yoneyama [Y]. Here we quote the following nice explanation from [HO2]:

> Consider a circular island, inhabited, to the sorrow of the others, by three philanthropists. One has a lake of water, another of milk and a third of wine. The first, in a fit of generosity, decides to built a network of canals bringing water within 100 meters of every spot of the island. It is clearly possible to do this keeping the union of the original water lake and the water canals connected and simply connected, with closures disjoint from the other lakes.
>
> Next the second, perhaps worried about child nutrition, decides to bring milk to within 10 meters of every spot on the island, and builds a system of canals to that effect. She also keeps her milk locus connected and simply connected.

Not to be outdone, the purveyor of wine now decides to bring wine to within 1 meter of every spot on the island. He finds his canal building rather more of an effort than the previous two, but being properly fortified, he carries it out.

In turn, each of the three philanthropists brings his or her product closer to the poor inhabitants. It should be clear that the construction can be continued, and that in the limit the construction achieves the desired result: each of the lakes, being an increasing union of connected and simply connected open sets, is a connected, simply connected set, and each point of the boundary of one is in the boundary of the other two.

In the same paper Yoneyama writes that the construction "was informed to me by Mr. Wada." (see the footnote in page 60 of [Y]). This is why such domains are now called Lakes of Wada. But, who is this Mr. Wada? Here is his picture:[6]

FIGURE 8. Takeo Wada (1882–1944).

He is Takeo Wada, a Japanese mathematician working on analysis and general topology. He was one of the first students in the mathematics department of Kyoto Imperial University (now Kyoto University) and he later became a full professor there.[7]

What is surprising about Theorem 4.1 is that a single map f possessing at least two attractive periodic points generates such domains in $\mathbb{C}^2$ (notice that the boundary of $\mathbb{C}^2 \setminus K^+$ is also J^+). In [HO2] Hubbard and Oberste-Vorth obtained a sufficient condition for a real Hénon map to have such curious domains in $\mathbb{R}^2$ as its attractive basins.

[6]By courtesy of Mathematics Library at Kyoto University.

[7]According to J. H. Przytycki, most likely Wada published the first paper in Japan devoted to topology in 1911/1912. See his article *Notes to the early history of the knot theory in Japan*, `Arxiv:math/0108072`.

4.2. **FB domains.** A *Fatou-Bieberbach domain* in $\mathbb{C}^2$ is a proper subdomain in $\mathbb{C}^2$ which is biholomorphically equivalent to $\mathbb{C}^2$. Since any attractive basin of f is contained in K^+ and since $\mathbb{C}^2 \setminus K^+$ is non-empty, it is always a Fatou-Bieberbach domain.

Another question related to Theorem 4.1 is the existence/non-existence of a Fatou-Bieberbach domains with smooth boundaries. There exists a Fatou–Bieberbach domain with C^∞-smooth boundary by using a non-autonomous iterations [St]. On the other hand, as a consequence of Theorem 4.1 we have

Corollary 4.2 (Bedford–Smillie [BS$_{\mathbb{C}}$2])**.** *If f has at least two attractive basins, their boundaries cannot even be a topological manifold at any point.*

Therefore, the only remaining case where the boundary of an attractive basin could be smooth is when f has only one attractive basin. Very recently the following result has appeared.

Theorem 4.3 (Bedford–Kim [BK])**.** *For any f, its forward Julia set J^+ can not be smooth of class C^1 as a manifold with boundary.*

This result gives a complete answer to the question mentioned above.

5. Construction of hyperbolic complex Hénon maps

In this section we discuss Problem (iii). In Subsection 5.1 we establish a criterion for hyperbolicity of a polynomial diffeomorphism of $\mathbb{C}^2$ and in Subsection 5.2 we construct a first example of a hyperbolic Hénon map whose dynamics is intrinsically complex two-dimensional.

5.1. **Hyperbolicity.** Let $p : \mathbb{C} \to \mathbb{C}$ be a polynomial of $\deg p \geq 2$ and let J_p is its Julia set. Following [HO2] we denote by $\hat{J}_p \equiv \varprojlim(p, J_p)$ the projective limit of $p : J_p \to J_p$ and by $\hat{p} : \hat{J}_p \to \hat{J}_p$ the shift map on it.

Definition 5.1. *A polynomial diffeomorphism f of $\mathbb{C}^2$ is called planar*[8] *if there exists an expanding polynomial p so that $f : J_f \to J_f$ is topologically conjugate to $\hat{p} : \hat{J}_p \to \hat{J}_p$.*

As an example of hyperbolic polynomial diffeomorphisms of $\mathbb{C}^2$, it is known that a small perturbation of an expanding polynomial is hyperbolic. More precisely,

Theorem 5.2. *Let p be expanding. Then, there exists $b_* > 0$ so that for any $0 < |b| < b_*$ the generalized Hénon map $f = f_{p,b}$ is hyperbolic on its Julia set* [FS, HO2]*. Moreover, $f : J_f \to J_f$ is topologically conjugate to $\hat{p} : \hat{J}_p \to \hat{J}_p$, i.e. such $f_{p,b}$ is planar* [HO2]*.*

Next we introduce a criterion for hyperbolicity of polynomial diffeomorphisms f of $\mathbb{C}^2$. Let A_x and A_y be bounded domains in $\mathbb{C}$ and let $\mathcal{A} = A_x \times A_y$. We then have projections $\pi_x : \mathcal{A} \to A_x$ and $\pi_y : \mathcal{A} \to A_y$. The following condition has been first introduced in [HO2] when $\mathcal{A}$ is a polydisk (see [I1, IS1] for more general case).

Definition 5.3. *We call $\iota_{\mathcal{A}}, f : \mathcal{A} \cap f^{-1}(\mathcal{A}) \to \mathcal{A}$ a crossed mapping of degree d if*

$$\rho_f \equiv (\pi_x \circ f, \pi_y \circ \iota_{\mathcal{A}}) \,:\, \mathcal{A} \cap f^{-1}(\mathcal{A}) \longrightarrow \mathcal{A}$$

is proper of degree d, where $\iota_{\mathcal{A}} : \mathcal{A} \cap f^{-1}(\mathcal{A}) \to \mathcal{A}$ is the inclusion.

Let $\mathcal{F}_h = \{A_x(y)\}_{y \in A_y}$ be the horizontal foliation of $\mathcal{A} \cap f^{-1}(\mathcal{A})$ with leaves $A_x(y) = (A_x \times \{y\}) \cap (\mathcal{A} \cap f^{-1}(\mathcal{A}))$, and $\mathcal{F}_v = \{A_y(x)\}_{x \in A_x}$ be the vertical foliation of $\mathcal{A} \cap f^{-1}(\mathcal{A})$ with leaves $A_y(x) = (\{x\} \times A_y) \cap (\mathcal{A} \cap f^{-1}(\mathcal{A}))$. Another condition we employ is the following [I1, IS1].

Definition 5.4. *We say that a crossed mapping $\iota_{\mathcal{A}}, f : \mathcal{A} \cap f^{-1}(\mathcal{A}) \to \mathcal{A}$ satisfies the no-tangency condition if $f(\mathcal{F}_h)$ and $\iota_{\mathcal{A}}(\mathcal{F}_v)$ have no tangencies in $\mathcal{A}$.*

Let $|\cdot|_{A_x}$ and $|\cdot|_{A_y}$ be Poincaré metrics in A_x and A_y respectively. The *horizontal Poincaré cone field* $(\{C_q^h\}_{q \in \mathcal{A}}, \|\cdot\|_h)$ is

$$C_q^h \equiv \left\{ v = (v_x, v_y) \in T_q\mathcal{A} : |v_x|_{A_x} \geq |v_y|_{A_y} \right\}$$

with the metric $\|v\|_h \equiv |D\pi_x(v)|_{A_x}$. The *vertical Poincaré cone field* $(\{C_q^v\}_{q \in \mathcal{A}}, \|\cdot\|_v)$ is

$$C_q^v \equiv \left\{ v = (v_x, v_y) \in T_q\mathcal{A} : |v_x|_{A_x} \leq |v_y|_{A_y} \right\}$$

with the metric $\|v\|_v \equiv |D\pi_y(v)|_{A_y}$. A product set $\mathcal{A} = A_x \times A_y$ equipped with the horizontal and the vertical Poincaré cone fields is called a *Poincaré box*.

A crossed mapping $\iota_{\mathcal{A}}, f : \mathcal{A} \cap f^{-1}(\mathcal{A}) \to \mathcal{A}$ is said to *expand the horizontal Poincaré cone field* if there exists $\lambda > 1$ so that for any $q \in \mathcal{A} \cap f^{-1}(\mathcal{A})$, we have $D\iota_{\mathcal{A}}^{-1}(C^h_{\iota_{\mathcal{A}}(q)}) \subset Df^{-1}(C^h_{f(q)})$ and $\lambda \|D\iota_{\mathcal{A}}(v)\|_h \leq \|Df(v)\|_h$ for any $v \in T_q(\mathcal{A} \cap f^{-1}(\mathcal{A}))$ with $D\iota_{\mathcal{A}}(v) \in C^h_{\iota_{\mathcal{A}}(q)}$. Similarly, a crossed mapping is said to *contract the vertical Poincaré cone field* if there exists $\lambda > 1$ so that

[8] In this article the word *planar* in Definition 5.1 is a special usage; it means complex one-dimensional (real two-dimensional).

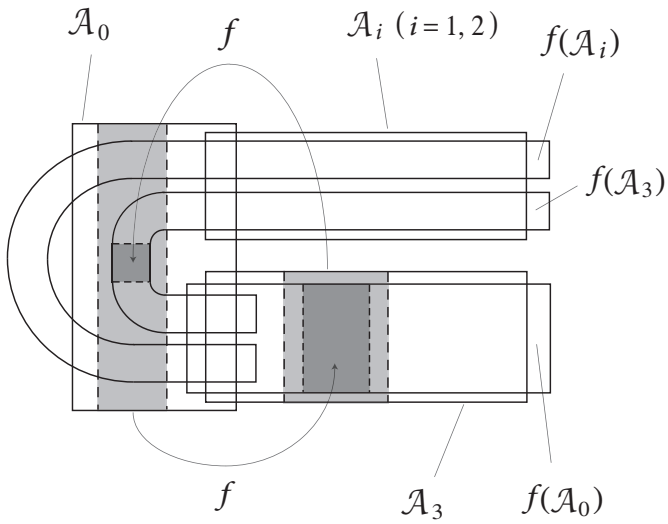

FIGURE 9. Poincaré boxes for the non-planar map in Theorem 5.8.

for any $q \in \mathcal{A} \cap f^{-1}(\mathcal{A})$, we have $Df^{-1}(C^v_{f(q)}) \subset D\iota_{\mathcal{A}}^{-1}(C^v_{\iota_{\mathcal{A}}(q)})$ and $\lambda\|Df(v)\|_v \leq \|D\iota_{\mathcal{A}}(v)\|_v$ for any $v \in T_q(\mathcal{A} \cap f^{-1}(\mathcal{A}))$ with $Df(v) \in C^v_{f(q)}$. A crossed mapping is called a *hyperbolic system* if it expands the horizontal Poincaré cone field and contracts the vertical Poincaré cone field.

The following statements give hyperbolicity criterion for polynomial diffeomorphisms of $\mathbb{C}^2$ with a single Poincaré box.

Theorem 5.5 (Ishii–Smillie [I1])**.** *If a crossed mapping $\iota_{\mathcal{A}}, f : \mathcal{A} \cap f^{-1}(\mathcal{A}) \to \mathcal{A}$ satisfies the non-tangency condition, it is a hyperbolic system.*

Corollary 5.6 (Ishii–Smillie [I1])**.** *If a crossed mapping $\iota_{\mathcal{A}}, f : \mathcal{A} \cap f^{-1}(\mathcal{A}) \to \mathcal{A}$ satisfies the non-tangency condition, f is uniformly hyperbolic on $\bigcap_{n\in\mathbb{Z}} f^n(\mathcal{A})$.*

Note that there are more checkable criteria for a map to be a crossed mapping called the *boundary compatibility condition* (Definition 2.15 in [I1]) and for the non-tangency condition called the *off-criticality condition* (Definition 2.16 in [I1]) which can be verified by hand or by computer assistance. Together with the technique of *homotopy shadowing* developed in [IS1], one obtains a quantitative estimate for the constant b_* in Theorem 5.2 and a new proof of the latter half of the statement in the theorem.

Corollary 5.7. *For the complex Hénon family:*

$$f = f_{c,b} : (x, y) \longmapsto (x^2 + c - by, x),$$

we have the following.

(1) *When $|c| > 2$, we may take $b_* = \sqrt{|c|/2} - 1$ in Theorem 5.2* [Ob, MNTU].
(2) *When $c = 0$, we may take $b_* = (\sqrt{2} - 1)/2$ in Theorem 5.2* [IS1].
(3) *When $c = -1$, we may take $b_* = 0.02$ in Theorem 5.2* [IS1].

We remark that Theorem 5.5 as well as Corollary 5.6 holds for a map f from a Poincaré box to a different Poincaré box (see Corollary 2.17 in [I1]). Moreover, one can extend them to the case where f is a system of maps from the disjoint union of finitely many Poincaré boxes to itself (see Corollary 2.18 in [I1]).

5.2. **Non-planarity.** Theorem 5.2 tells that the dynamics of a Hénon map obtained as a small perturbation of an expanding polynomial is intrinsically complex one-dimensional. Therefore, a natural question arise; is there a hyperbolic polynomial diffeomorphism which is non-planar? The first non-planar example of a hyperbolic Hénon map was constructed by the the author [I1].

Theorem 5.8 (Ishii [I1])**.** *The cubic complex Hénon map:*

$$f_{a,b} : (x, y) \longmapsto (-x^3 + a - by, x)$$

with $(a, b) = (-1.35, 0.2)$ *is hyperbolic but non-planar.*

The proof of Theorem 5.8 goes as follows. First we choose four Poincaré boxes $\{\mathcal{A}_i\}_{i=0}^3$ in $\mathbb{C}^2$ where $\mathcal{A}_i = A_{x,i} \times A_{y,i}$ (see Figure 9). Note that $A_{x,0}$ and $A_{x,3}$ are annuli so that $\mathcal{A}_0$ and $\mathcal{A}_3$ have vertical holes which are shaded in Figure 9. Also note that, $\mathcal{A}_1$ and $\mathcal{A}_2$ are drawn at the same place to simplify the figure, although they are actually disjoint. Set $\Sigma^0 \equiv \{0, 1, 2, 3\}$ and

$$\Sigma^1 \equiv \big\{(0, 3), (1, 0), (1, 1), (1, 2), (2, 0), (2, 1), (2, 2), (3, 0), (3, 1), (3, 2)\big\}.$$

We first show that the union $\bigcup_{i\in\Sigma^0} \mathcal{A}_i$ covers the Julia set J_f of the non-planar map $f = f_{a,b}$ in Theorem 5.8 with computer assistance. Next, the multivalued dynamical system:

$$\iota_{\mathcal{A}}, f \ : \ \mathcal{A}^1 \equiv \bigcup_{(i,j)\in\Sigma^1} \mathcal{A}_i \cap f^{-1}(\mathcal{A}_j) \ \longrightarrow \ \mathcal{A}^0 \equiv \bigcup_{j\in\Sigma^0} \mathcal{A}_j \tag{1}$$

lifts to the disjoint union of boxes:

$$\tilde{\iota}_{\mathcal{A}}, \tilde{f} \ : \ \widetilde{\mathcal{A}}^1 \equiv \bigsqcup_{(i,j)\in\Sigma^1} \mathcal{A}_i \cap \tilde{f}^{-1}(\mathcal{A}_j) \ \longrightarrow \ \widetilde{\mathcal{A}}^0 \equiv \bigsqcup_{j\in\Sigma^0} \mathcal{A}_j. \tag{2}$$

We show that $\iota_{\mathcal{A}}, f : \mathcal{A}_i \cap f^{-1}(\mathcal{A}_j) \to \mathcal{A}_j$ is a crossed mapping satisfying the non-tangency condition for all $(i, j) \in \Sigma^1$ by verifying the checkable conditions mentioned above again by computer assistance. This implies that (2) is a hyperbolic system in an extended sense.

Note that since the boxes $\{\mathcal{A}_i\}_{i=0}^3$ have overlaps in $\mathbb{C}^2$, this does not immediately imply the hyperbolicity of the original system (1). To overcome this point, we define a new horizontal cone at a point in the overlap as

$$C_p^{\cap} \equiv \bigcap_{i\in I(p)} C_p^i$$

for $p \in \mathcal{A}^0$, where C_p^i is the horizontal Poincaré cone at $p \in \mathcal{A}_i$ with respect to the Poincaré box $\mathcal{A}_i$ and $I(p) \equiv \big\{i \in \Sigma^0 : p \in \mathcal{A}_i\big\}$. We also define a metric $\|\cdot\|_{\cap}$ in it by

$$\|v\|_{\cap} \equiv \min\big\{\|v\|_{\mathcal{A}_i} : i \in I(p)\big\}$$

for $v \in C_p^{\cap}$ (see Definition 4.1 in [IS1]). One can then verify that it is invariant and expanding (Proposition 4.3 in [IS1]) and indeed non-empty (Corollary 4.21 in [IS1]). This yields the hyperbolicity of the cubic Hénon map in Theorem 5.8 on its Julia set.

Next we prove the non-planarity of the cubic Hénon map $g = f_{a,b}$. Suppose that $g : J_g \to J_g$ is topologically conjugate to $\hat{p} : \hat{J}_p \to \hat{J}_p$ for an expanding polynomial p. Then, by the comparison of the entropy, we know that the degree of p is 3. Since g has an attractive 2-cycle and since its Julia set J_g is neither connected nor totally disjoint, we know that one of the two critical points of p escapes to infinity and the other converges to an attractive 2-cycle. This puts certain constraints on $\hat{J}_p$. On the other hand, by using the four Poincaré boxes in the proof of Theorem 5.8, we can analyze the topology of J_g in terms of a symbolic dynamics (Theorem 4.23 in [IS1]). By comparing the topological types of some path-components of J_g and $\hat{J}_p$, we finally arrive at a contradiction (see the end of Section 4 in [I1] for more details).

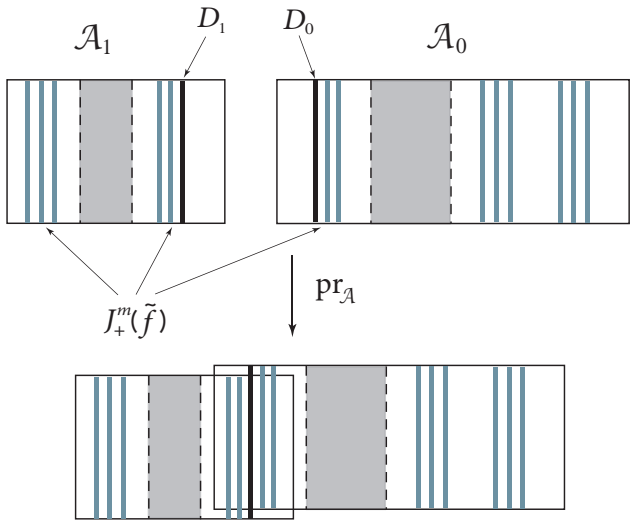

FIGURE 10. Intersecting pair of pinching disks $\{D_0, D_1\}$.

6. Three methods to describe hyperbolic Julia sets

In this section Problems (v), (vi) and (vii) will be discussed. Namely, we construct Hubbard trees, iterated monodromy groups and associated automata for hyperbolic polynomial diffeomorphisms of $\mathbb{C}^2$ starting from the family of Poincaré boxes employed in Subsection 5.2.

6.1. **Hubbard trees.** Let us first explain the construction of Hubbard trees [I2] by using the non-planar map obtained in Theorem 5.8. Let $\{\mathcal{A}_i\}_{i=0}^3$ be the family of Poincaré boxes appeared in the proof of Theorem 5.8 where $\mathcal{A}_i = A_{x,i} \times A_{y,i}$. Define the forward Julia set of the disjoint system (2) by

$$J_+^0(\tilde{f}) \equiv \bigcap_{n\geq 0} (\tilde{f} \circ \tilde{\iota}_{\mathcal{A}}^{-1})^{-n}(\widetilde{\mathcal{A}}^0)$$

(and similar definition for $J_+^1(\tilde{f})$). Since $A_{y,i}$ is simply connected and the disjoint system (2) is a hyperbolic system, one can show that $J_+^m(\tilde{f}) \cap \mathcal{A}_i$ forms a lamination where every leaf is a vertical disk of degree one in $\mathcal{A}_i$, i.e. the projection of the disk to $A_{y,i}$ is a proper map of degree one. Moreover, one may assume that these disks are straight vertical (see the comment following Lemma 5.5 of [IS1]). In particular, the image of any leaf of the lamination by the projection $\pi_x : \mathcal{A}_i \to A_{x,i}$ is one point. Therefore, by letting $\mathcal{S}_i \equiv A_{x,i}$, $\tilde{\sigma} \equiv \pi_x \circ \tilde{f} \circ \pi_x^{-1}$ and $\tilde{\iota}_{\mathcal{S}} \equiv \pi_x \circ \tilde{\iota}_{\mathcal{A}} \circ \pi_x^{-1}$, we obtain the multivalued dynamical system:

$$\tilde{\iota}_{\mathcal{S}}, \tilde{\sigma} \ : \ \widetilde{\mathcal{S}}^1 \equiv \bigsqcup_{(i,j)\in\Sigma^1} \mathcal{S}_i \cap \tilde{\sigma}^{-1}(\mathcal{S}_j) \ \longrightarrow \ \widetilde{\mathcal{S}}^0 \equiv \bigsqcup_{j\in\Sigma^0} \mathcal{S}_j. \tag{3}$$

Since the disjoint system (2) expands the horizontal Poincaré cone field, the system (3) equipped with the Poincaré metrics in $\widetilde{\mathcal{S}}^m$ $(m = 0, 1)$ is expanding in the sense of Definition 1.8.

Now we proceed as explained in item (v) in Section 1, but here is a crucial difference which comes from the overlaps of Poincaré boxes. Let $\mathrm{pr}_{\mathcal{A}} : \widetilde{\mathcal{A}}^m \to \mathcal{A}^m$ be the obvious map.

Definition 6.1. *Let D_0 and D_1 be two leaves in the lamination $J_+^m(\tilde{f})$ $(m = 0, 1)$. We call the pair $\{D_0, D_1\}$ a pair of pinching disks in $\widetilde{\mathcal{A}}^m$ if $\mathrm{pr}_{\mathcal{A}}(D_0) \cap \mathrm{pr}_{\mathcal{A}}(D_1) \neq \emptyset$. Such disks are called pinching disks in $\widetilde{\mathcal{A}}^m$ (see Figure 10).*

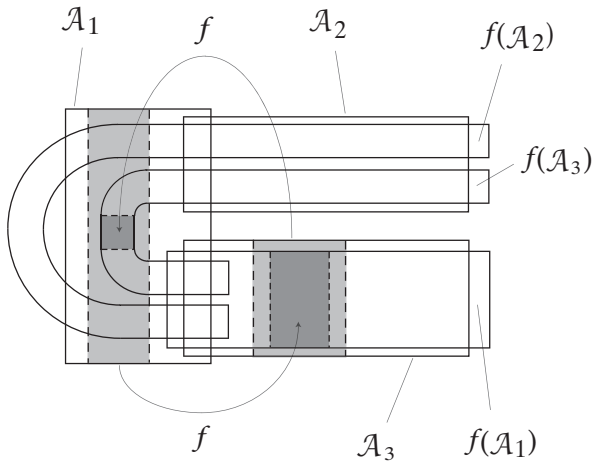

FIGURE 11. Poincaré boxes for the Basilica-Horseshoe map.

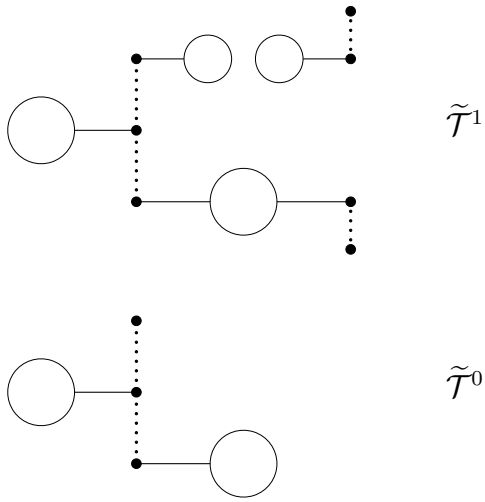

FIGURE 12. Hubbard tree for the Basilica-Horseshoe map f_{BH}.

The images of the pinching disks in $\widetilde{\mathcal{A}}^m$ by the projection π_x to $\widetilde{\mathcal{S}}^m$ is called the *pinching locus* in $\widetilde{\mathcal{S}}^m$ and denoted by P^m. We fill up all holes in $\widetilde{\mathcal{S}}^m$ $(m = 0, 1)$ and choose a point from each hole which we call a center. Let C^m $(m = 0, 1)$ be the set of centers in $\widetilde{\mathcal{S}}^m$. We define $\mathcal{H}^m$ to be the legal hull of $P^m \cup C^m$ in $\widetilde{\mathcal{S}}^m$ (just as in item (v) of Section 1) and then replace every point $c \in \mathcal{H}^m$ which belongs to C^m by a loop to obtain a tree $\widetilde{\mathcal{T}}^m$ decorated with loops. The map $\tilde{\sigma}$ naturally induces a map $\tilde{\tau} : \widetilde{\mathcal{T}}^1 \to \widetilde{\mathcal{T}}^0$ up to homotopy. One can also define a map $\tilde{\iota}_{\mathcal{T}} : \widetilde{\mathcal{T}}^1 \to \widetilde{\mathcal{T}}^0$ up to homotopy which is the identity on $\widetilde{\mathcal{T}}^0$ and smashing each connected component of $\widetilde{\mathcal{T}}^1 \setminus \widetilde{\mathcal{T}}^0$ to a point. We say that two points t and t' in P^m form a *pinching pair* and denoted as $t \approx_m t'$ if there exist a pair of pinching disks $\{D, D'\}$ in $\widetilde{\mathcal{A}}^m$ so that $t = \pi_x(D)$ and $t' = \pi_x(D')$.

Definition 6.2 (Ishii [I2', I3])**.** *We call the multivalued dynamical system:*

$$\tilde{\iota}_{\mathcal{T}}, \tilde{\tau} : \widetilde{\mathcal{T}}^1 \longrightarrow \widetilde{\mathcal{T}}^0$$

together with the set of pinching pairs in P^m the Hubbard tree for f.

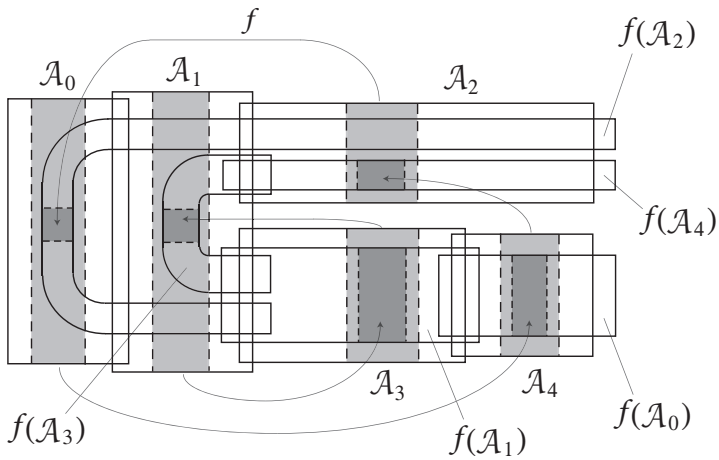

FIGURE 13. Poincaré boxes for the Airplane-Basilica map.

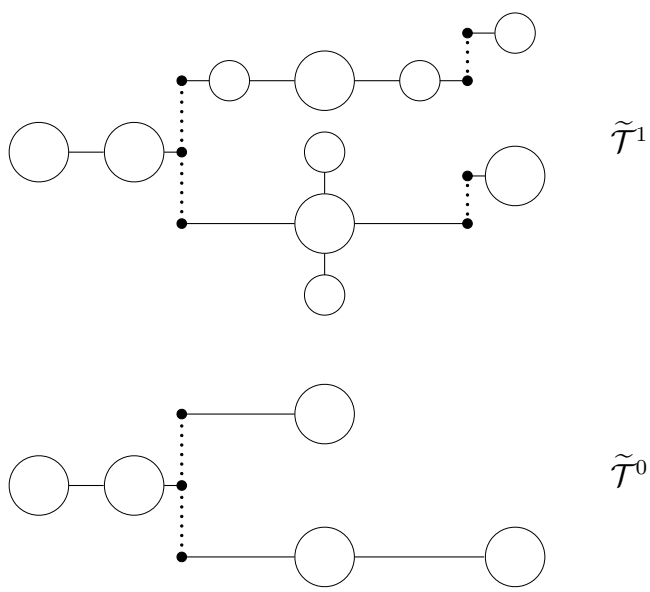

FIGURE 14. Hubbard tree for the Airplane-Basilica map f_{AB}.

Remark 6.3. *The above definition has been first presented in Definition 2.4 of* [I2'] *which is slightly different from the original one in Definition 4.5 of* [I2].

Now we construct a topological model for the Julia set starting from a Hubbard tree [I2', I3]. Consider first the shift map on the orbit space:

$$\tilde{\tau}^{\pm\infty} : \widetilde{\mathcal{T}}^{\pm\infty} \longrightarrow \widetilde{\mathcal{T}}^{\pm\infty}$$

of the Hubbard tree $\tilde{\iota}_{\mathcal{T}}, \tilde{\tau} : \widetilde{\mathcal{T}}^1 \to \widetilde{\mathcal{T}}^0$. For $\underline{t} = (t_n)_{n\in\mathbb{Z}}$ and $\underline{t}' = (t'_n)_{n\in\mathbb{Z}}$ in $\widetilde{\mathcal{T}}^{\pm\infty}$, we define $\underline{t} \approx_{\pm\infty} \underline{t}'$ if either $t_i = t'_i$ or $t_i \approx_1 t'_i$ holds for any $i \in \mathbb{Z}$. We also write $\underline{t} \sim_{\pm\infty} \underline{t}'$ if there exist a sequence of points $\underline{t} = \underline{t}^0, \underline{t}^1, \ldots, \underline{t}^k = \underline{t}'$ in $\widetilde{\mathcal{T}}^{\pm\infty}$ with $\underline{t}^j \approx_{\pm\infty} \underline{t}^{j+1}$ for all $0 \le j \le k-1$. Then,

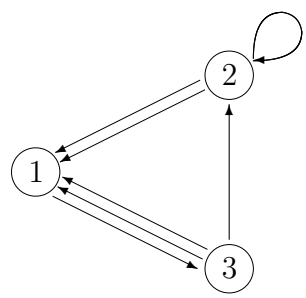

FIGURE 15. Transition diagram for the Basilica-Horseshoe map.

$\sim_{\pm\infty}$ defines an equivalence relation in $\widetilde{\mathcal{T}}^{\pm\infty}$, hence the factor map:

$$\tilde{\tau}^{\pm\infty}/_{\sim_{\pm\infty}} : \widetilde{\mathcal{T}}^{\pm\infty}/_{\sim_{\pm\infty}} \longrightarrow \widetilde{\mathcal{T}}^{\pm\infty}/_{\sim_{\pm\infty}}$$

of $\tilde{\tau}^{\pm\infty}$ is well-defined.[9]

The following theorem states that the dynamics of f is reconstructed from its Hubbard tree.

Theorem 6.4 (Ishii [I2', I3])**.** *Let $\iota_{\mathcal{A}}, f : \mathcal{A}^1 \to \mathcal{A}^0$ be a hyperbolic system and let $\mathfrak{T}$ be its Hubbard tree. If $\mathcal{A}^{\pm\infty}$ is a hyperbolic set and $J_f \subset \mathcal{A}^0$, then $f : J_f \to J_f$ is topologically conjugate to the factor $\tilde{\tau}^{\pm\infty}/_{\sim_{\pm\infty}} : \widetilde{\mathcal{T}}^{\pm\infty}/_{\sim_{\pm\infty}} \longrightarrow \widetilde{\mathcal{T}}^{\pm\infty}/_{\sim_{\pm\infty}}$.*

The proof of this result is based on the method of homotopy shadowing [IS1].

Here we present two examples of hyperbolic systems and their Hubbard trees. The first one called the *Basilica-Horseshoe map* denoted by $f = f_{\mathrm{BH}}$ consists of three Poincaré boxes which are mapped with each other as described in Figure 11. This looks similar to the non-planar cubic Hénon map in Figure 9, but we merge the right-upper boxes $\mathcal{A}_1$ and $\mathcal{A}_2$ in Figure 9 into one box (and denote it by $\mathcal{A}_2$ in Figure 11). The map f_{BH} has a unique attractive cycle of period two and its Julia set is disconnected. Note that the restriction $f_{\mathrm{BH}} : \mathcal{A}_2 \cap f_{\mathrm{BH}}^{-1}(\mathcal{A}_1) \to \mathcal{A}_1$ looks like the Horseshoe map, and the restriction $f_{\mathrm{BH}} : \mathcal{A}_3 \cap f_{\mathrm{BH}}^{-1}(\mathcal{A}_1) \to \mathcal{A}_1$ looks like the Basilica map. Figure 12 describes the Hubbard tree for f_{BH}.

The second one called the *Airplane-Basilica map* denoted by $f = f_{\mathrm{AB}}$ consists of three Poincaré boxes which are mapped with each other as described in Figure 13. The map f_{AB} has two attractive cycles of period two and and three respectively, and its Julia set is connected. Note that the map f_{AB} looks like a mixture of the Airplane map and the Basilica map. Figure 14 describes the Hubbard tree for f_{AB}.

6.2. **IMG actions.** In this subsection we introduce the notion of the iterated monodromy groups for a class of hyperbolic polynomial diffeomorphisms of $\mathbb{C}^2$. Here we formulate an iterated monodromy group as an inverse semigroup action on certain quotient space of the disjoint union of several preimage trees (see Appendix of [I3] for the generality on inverse semigroup actions). In the original paper [I3] we defined this notion in terms of its Hubbard tree in an algorithmic way. Here, however, we give an intuitive definition starting from the data of a family of Poincaré boxes with overlaps. This definition is purely geometric and we explain it by the Basilica-Horseshoe map f_{BH} appeared in the previous subsection.

Let A_x and A_y be connected open subsets of $\mathbb{C}$ with A_y simply connected and let $\mathcal{A} = A_x \times A_y$ be a Poincaré box. Let $\iota_{\mathcal{A}}, f : \mathcal{A} \cap f^{-1}(\mathcal{A}) \to \mathcal{A}$ be a hyperbolic system obtained as a small perturbation of an expanding polynomial map $p : A_x \cap p^{-1}(A_x) \to A_x$ of degree $d \geq 2$. By an

[9]This is what we called the *limit-quotient model* in the paper [I3].

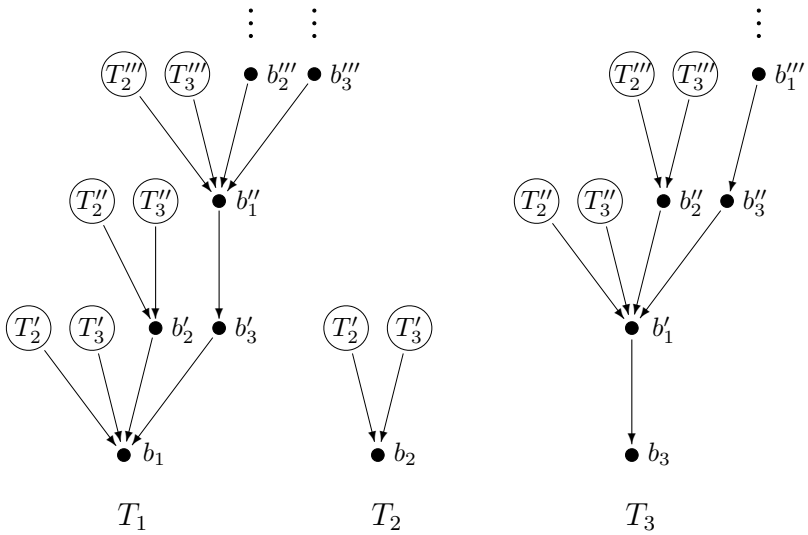

FIGURE 16. Identifying the preimage trees for the Basilica-Horseshoe map.

appropriate change of coordinates (see Subsection 5.1 of [IS1]) we have $p \circ \mathrm{pr}_x = \mathrm{pr}_x \circ f$, where $\mathrm{pr}_x : \mathcal{A} \to A_x$ is the x-projection. Then, for any vertical disk V in $\mathcal{A}$, the slice $V \cap f^n(\mathcal{A})$ has a nested structure so that $V \cap J_-^0(\tilde{f})$ becomes a Cantor set, where

$$J_-^0(f) \equiv \bigcap_{n \geq 0} (f \circ \iota_{\mathcal{A}}^{-1})^n(\mathcal{A}).$$

Hence, the projection $\mathrm{pr}_x : J_-^0(\tilde{f}) \to A_x$ is a fibration with Cantor fibers, and the Cantor fiber over $x \in A_x$ can be identified with the "ideal boundary" of the preimage tree of p rooted at x. With this identification, the action of the iterated monodromy group of p on T is interpreted as the holonomy group action on a Cantor fiber. Moreover, we note that each connected component of $V \cap f^n(\mathcal{A})$ can be identified with certain subtree of T.

Next consider the disjoint model $\tilde{\iota}_{\mathcal{A}}, \tilde{f} : \widetilde{\mathcal{A}}^1 \to \widetilde{\mathcal{A}}^0$ of a hyperbolic system $\iota_{\mathcal{A}}, f : \mathcal{A}^1 \to \mathcal{A}^0$ with several Poincaré boxes, where $\widetilde{\mathcal{A}}^0 \equiv \bigsqcup_{i \in \Sigma^0} \mathcal{A}_i$ and $\mathcal{A}^0 \equiv \bigcup_{i \in \Sigma^0} \mathcal{A}_i$ (see Subsection 5.2 for the definition of $\widetilde{\mathcal{A}}^1$ and $\mathcal{A}^1$). Then, the lamination in each box $J_-^0(\tilde{f}) \cap \mathcal{A}_i$ looks similar to the previous case, where

$$J_-^0(\tilde{f}) \equiv \bigcap_{n \geq 0} (\tilde{f} \circ \tilde{\iota}_{\mathcal{A}}^{-1})^n(\widetilde{\mathcal{A}}^0)$$

(and similar definition for $J_-^1(\tilde{f})$). To the lamination in $J_-^0(\tilde{f}) \cap \mathcal{A}_i$ we can associate a preimage tree T_i. Note that since the degree of the map varies from boxes to boxes, the preimage trees are no more regular but "SFT-like".

Finally, we define the iterated monodromy group for a hyperbolic system $\iota_{\mathcal{A}}, f : \mathcal{A}^1 \to \mathcal{A}^0$ with overlapping Poincaré boxes $\mathcal{A}^0 \equiv \bigcup_{i \in \Sigma^0} \mathcal{A}_i$ and $\mathcal{A}^1 = \bigcup_{(i,j) \in \Sigma^1} \mathcal{A}_i \cap f^{-1}(\mathcal{A}_j)$. To do this, we first need to define a space on which the iterated monodromy group acts. Note that in this case the laminations in $\mathrm{pr}_{\mathcal{A}}(J_-^m(\tilde{f}) \cap \mathcal{A}_i)$ are overlapping with each other. Since a geometric interpretation of an iterated monodromy group is the holonomy group action for the laminations, we need to understand how these laminations are continued from boxes to boxes. Each section of the lamination is identified with the ideal boundary of the corresponding preimage tree, so the overlapping data should be described by certain identification between the preimage trees.

Below we explain this identification rule for the Basilica-Horseshoe map. In this process, the following principle is important which extends the observation for the case of a single Poincaré box; there is a one-to-one correspondence between a subtree T_{i_N} in T_{i_0} of the form:

$$b_{i_0} \longleftarrow b'_{i_1} \longleftarrow \cdots \longleftarrow b^{(N-1)}_{i_{N-1}} \leftarrow T_{i_N}$$

and a connected component of

$$V_{b_{i_0}} \cap \tilde{f}(\mathcal{A}_{i_1}) \cap \cdots \cap \tilde{f}^{N-1}(\mathcal{A}_{i_{N-1}}) \cap \tilde{f}^N(\mathcal{A}_{i_N}),$$

where b_i is the base-point of a connected component $\mathcal{T}_i$ of $\mathcal{T}^0$ (hence it is the root of the preimage tree T_i) and $V_{b_i} = \mathrm{pr}_x^{-1}(b_i)$ is the vertical disk in $\mathcal{A}_i$ over b_i.

First note that the transitions between the Poincaré boxes for this map are described in Figure 9 and hence its transition diagram is given in Figure 15.

Step 1: T_2 can be seen as a subtree of T_1. The two subtrees T'_2's in the first level of T_1 (the zeroth level is the root) correspond to the two connected components of $V_{b_1} \cap \tilde{f}(\mathcal{A}_2)$ denoted by D'_{b_1} and E'_{b_1} respectively. Similarly, the subtree T'_2 in the first level of T_2 corresponds to $D'_{b_2} = V_{b_2} \cap \tilde{f}(\mathcal{A}_2)$. Then, one of $\mathrm{pr}_{\mathcal{A}}(D'_{b_1})$ and $\mathrm{pr}_{\mathcal{A}}(E'_{b_1})$ coincides with $\mathrm{pr}_{\mathcal{A}}(D'_{b_2})$ in $\mathcal{A}$ by letting $\mathrm{pr}_{\mathcal{A}}(V_{b_1}) \cap \mathrm{pr}_{\mathcal{A}}(V_{b_2}) \neq \emptyset$. Assume that D'_{b_1} is such a connected component and identify the corresponding subtree T'_2 in the first level of T_1 with the subtree T'_2 in the first level of T_2. Similarly we identify one of two T'_3's in the first level of T_1 with T'_3 in the first level of T_2. This gives a bijective correspondence between the infinite paths ending at b_1 in T_1 through the union of T'_2 and T'_3 in the first level of T_1 and the ones ending at b_2 in T_2. Hence T_2 can be seen as a subtree of T_1 (see Figure 16).

Step 2: T_3 can be seen as a subtree of T_1. Let T'_2 (resp. T'_3) in the first level of T_1 be the one corresponding to the remaining component of $V_{b_1} \cap \tilde{f}(\mathcal{A}_2)$ (resp. $V_{b_1} \cap \tilde{f}(\mathcal{A}_3)$). We identify these two subtrees with T_3. To the root b'_2 of this subtree T'_2 in T_1 we have two edges from the subtrees T''_2 and T''_3 in the second level of T_1, and to the root b'_3 of the subtree T'_3 in the first level of T_1 we have an edge from T''_1 in the second level of T_1. To the root b'_1 of the subtree T'_1 in the first level of T_3 we have four edges from two T''_2's and two T''_3's in the second level of T_3.

The two subtrees T''_2's in the second level of T_3 correspond to the two connected components of $V_{b_3} \cap \tilde{f}(\mathcal{A}_1) \cap \tilde{f}^2(\mathcal{A}_2)$ denoted by D''_{b_3} and E''_{b_3} respectively. Similarly, the subtree T''_2 in the second level of T_1 corresponds to $E''_{b_1} = V_{b_1} \cap \tilde{f}(\mathcal{A}_2) \cap \tilde{f}^2(\mathcal{A}_2)$. Then, one of $\mathrm{pr}_{\mathcal{A}}(D''_{b_3})$ and $\mathrm{pr}_{\mathcal{A}}(E''_{b_3})$ coincides with $\mathrm{pr}_{\mathcal{A}}(E''_{b_1})$ by letting $\mathrm{pr}_{\mathcal{A}}(V_{b_1}) \cap \mathrm{pr}_{\mathcal{A}}(V_{b_3}) \neq \emptyset$. Assume that D''_{b_3} is such a connected component and identify the corresponding subtree T''_2 in the second level of T_3 with the subtree T''_2 in the second level of T_1. Similarly we identify one of two T''_3's in the second level of T_3 with T''_3 in the second level of T_1.

Now we repeat this procedure. Then, for most infinite paths in T_1 ending at the root point one can find corresponding paths which are eventually identified by the procedure above. The only exception is the path:

$$b_1 \longleftarrow b'_3 \longleftarrow b''_1 \longleftarrow b'''_3 \longleftarrow \cdots$$

in T_1. We define its corresponding path in T_3 to be the one:

$$b_3 \longleftarrow b'_1 \longleftarrow b''_3 \longleftarrow b'''_1 \longleftarrow \cdots .$$

This gives a bijective correspondence between the infinite paths ending at b_1 in T_1 through the union of T'_2 and T'_3 in the first level of T_1 and the ones ending at b_3 in T_3. Hence T_3 can be seen as a subtree of T_1 (see Figure 16 again).

Step 3: Action of $\mathrm{IMG}(\mathfrak{T})$ **on** T**.** The discussion in the previous step defines an equivalence relation called the *holonomy equivalence* denoted by $\sim_{\mathrm{holo}}$ in the disjoint union $T_1 \sqcup T_2 \sqcup T_3$ of the preimage trees. Set

$$T \equiv \big(T_1 \sqcup T_2 \sqcup T_3\big)/_{\sim_{\mathrm{holo}}}.$$

In the example discussed above, we identified T_2 and T_3 as subtrees of T_1, therefore $T = T_1$.

Let $\mathrm{IMG}(\widetilde{\mathfrak{T}})_i$ be the iterated monodromy group associated to a connected component $\mathcal{T}_i$ of $\mathcal{T}^0$ acting on T_i. Let $\kappa : T_1 \sqcup T_2 \sqcup T_3 \to T$ be the natural projection. Then, the action of $\mathrm{IMG}(\widetilde{\mathfrak{T}})_i$ on T_i descends to an inverse semigroup action on T which is denoted by $\kappa_*(\mathrm{IMG}(\widetilde{\mathfrak{T}})_i)$. We define

$$\mathrm{IMG}(\mathfrak{T}) \equiv \kappa_*(\mathrm{IMG}(\widetilde{\mathfrak{T}})_1) \odot \kappa_*(\mathrm{IMG}(\widetilde{\mathfrak{T}})_2) \odot \kappa_*(\mathrm{IMG}(\widetilde{\mathfrak{T}})_3),$$

where $G_1 \odot G_2$ denotes the free product of two inverse semigroup actions G_1 and G_2 (see Section 7 of [I3]), and call it the *iterated monodromy group* of the Hubbard tree $\mathfrak{T}$.

Let Π be the set of arrows in the diagram of Figure 15 and put

$$\Pi^{-\infty} \equiv \Pi_1^{-\infty} \sqcup \Pi_2^{-\infty} \sqcup \Pi_3^{-\infty},$$

where

$$\Pi_i^{-\infty} \equiv \big\{(\pi_n)_{n \le -1} \in \Pi^{-\mathbb{N}} : h(\pi_{n-1}) = t(\pi_n) \text{ for all } n \le -1 \text{ and } h(\pi_{-1}) = i\big\}$$

is the space of symbol sequences corresponding to the infinite paths in T_i ending at its root point. Hence, $\Pi^{-\infty}$ can be seen as the "ideal boundary" of T. Note that every element in $\Pi^{-\infty}$ corresponds to an infinite path in T ending at some root point which we call a *rooted path*.

Let $\Pi^{\pm\infty}$ be the set of bi-infinite paths in the diagram of Figure 15.

Definition 6.5. *We say that* $\underline{\pi} = (\pi_n)_{n\in\mathbb{Z}}$ *and* $\underline{\pi}' = (\pi'_n)_{n\in\mathbb{Z}}$ *in* $\Pi^{\pm\infty}$ *are holonomy equivalent and write* $\underline{\pi} \sim_{\mathrm{holo}} \underline{\pi}'$ *if for any* $n \in \mathbb{Z}$*, one of the following two conditions is satisfied;*

(i) *there exists* $N \le n$ *so that the subpaths corresponding to* $\cdots \pi_{N-1}\pi_N$ *and* $\cdots \pi'_{N-1}\pi'_N$ *of the rooted paths corresponding to* $\cdots \pi_{n-1}\pi_n$ *and* $\cdots \pi'_{n-1}\pi'_n$ *in* T *respectively are identified in* $T/_{\sim_{\mathrm{holo}}}$*, or*

(ii) *the sequences* $\cdots \pi_{n-1}\pi_n$ *and* $\cdots \pi'_{n-1}\pi'_n$ *form an exceptional pair.*

The action of the iterated monodromy group $\mathrm{IMG}(\mathfrak{T})$ on $T^*/_{\sim_{\mathrm{holo}}}$ induces an action on $\Pi^*/_{\sim_{\mathrm{holo}}}$ through the bijection $\widetilde{\Lambda} : \Pi^* \to T^*$ which extends to an action on $\Pi^{-\infty}/_{\sim_{\mathrm{holo}}}$. We call it the *standard action* of $\mathrm{IMG}(\mathfrak{T})$ on $\Pi^{-\infty}/_{\sim_{\mathrm{holo}}}$. For $e, e' \in \Pi^{\pm\infty}/_{\sim_{\mathrm{holo}}}$ we write $e \approx_{\mathrm{asym}} e'$ if $\underline{\pi} \sim_{\mathrm{asym}} \underline{\pi}$ in the extended sense of Definition 1.17 (see Subsection 9.4 of [BGN] for more precise definition) for some representatives $\underline{\pi} \in e$ and $\underline{\pi}' \in e'$. The equivalence relation generated by $\approx_{\mathrm{asym}}$ is called the *asymptotic equivalence* in $\Pi^{\pm\infty}/_{\sim_{\mathrm{holo}}}$ and is denoted again by $\approx_{\mathrm{asym}}$. Similarly, for $E, E' \in \Pi^{\pm\infty}/_{\sim_{\mathrm{asym}}}$ we write $E \approx_{\mathrm{holo}} E'$ if $\underline{\pi} \sim_{\mathrm{holo}} \underline{\pi}'$ in the sense of Definition 6.5 for some representatives $\underline{\pi} \in E$ and $\underline{\pi}' \in E'$. The equivalence relation generated by $\approx_{\mathrm{holo}}$ is called the *holonomy equivalence* in $\Pi^{\pm\infty}/_{\sim_{\mathrm{asym}}}$ and is denoted again by $\approx_{\mathrm{holo}}$.

Definition 6.6. *We call*

$$\mathcal{S}_{\mathrm{IMG}(\mathfrak{T})} \equiv \big(\Pi^{\pm\infty}/_{\sim_{\mathrm{holo}}}\big)/_{\approx_{\mathrm{asym}}}$$

the limit solenoid of the iterated monodromy group $\mathrm{IMG}(\mathfrak{T})$ *for the Hubbard tree* $\mathfrak{T}$*.*

We denote by $s : \mathcal{S}_{\mathrm{IMG}(\mathfrak{T})} \to \mathcal{S}_{\mathrm{IMG}(\mathfrak{T})}$ the factor of the shift map on $\Pi^{\pm\infty}$.

Theorem 6.7 (Ishii [I3])**.** *Let* $\iota_{\mathcal{A}}, f : \mathcal{A}^1 \to \mathcal{A}^0$ *be a hyperbolic system and let* $\mathfrak{T}$ *be its Hubbard tree. If* $\mathcal{A}^{\pm\infty}$ *is a hyperbolic set and* $J_f \subset \mathcal{A}^0$*, then* $f : J_f \to J_f$ *is topologically conjugate to the factor* $s : \mathcal{S}_{\mathrm{IMG}(\mathfrak{T})} \to \mathcal{S}_{\mathrm{IMG}(\mathfrak{T})}$ *of the shift map.*

The proof of this result is based on the method of homotopy shadowing [IS1].

6.3. **Automata.** In his thesis [Ol] R. Oliva introduced an algorithm for drawing gradient lines which allows the gradient lines to be drawn all the way until they land at J_f. Thus the computer can determine whether two gradient lines land at the same point. These pictures are colored in a way that shows the solenoidal coding, and conversely, given a point of the solenoid, the computer can plot the corresponding ray. This gave Oliva the data (pairs of identified solenoidal points) which were the basis for his automaton. Figures 4.16, 4.17 and 4.18 in [Ol] give plots where many pairs of rays were tested to corroborate his automaton.

The purpose of this subsection is to construct automata associated with iterated monodromy group actions for certain hyperbolic polynomial diffeomorphisms of $\mathbb{C}^2$ along with [I3] (see also Lemma 1 in [F] for a related result). The idea of the construction is as follows. First, the inverse semigroup actions of $\mathrm{IMG}(\widetilde{\mathfrak{T}})_i$ give rise to the direct sum of the inverse semigroup actions of

$$\mathrm{IMG}(\widetilde{\mathfrak{T}}) \equiv \coprod_{i\in\Sigma^0} \mathrm{IMG}(\widetilde{\mathfrak{T}})_i$$

on the disjoint union of preimage trees $\bigsqcup_{i\in\Sigma^0} T_i$ (see Appendix of [I3] for the definition of the direct sum of inverse semigroup actions). We next reformulate the notion of holonomy equivalence in terms of an inverse semigroup action called the *holonomy pinching group* $\mathcal{I}_{\mathfrak{T}}$. Intuitively the action of $\mathrm{IMG}(\widetilde{\mathfrak{T}})$ describes the dynamics in the expanding direction and the action of $\mathcal{I}_{\mathfrak{T}}$ describes the dynamics in the contracting direction. It is shown that the two actions are both self-similar and hence can define corresponding automata. We define the automaton for a polynomial diffeomorphisms of $\mathbb{C}^2$ as certain power of the product of the two automata (Definition 6.12) and show that the quotient space with respect to the equivalence relation generated by the automaton is identical to $\mathcal{S}_{\mathrm{IMG}(\mathfrak{T})}$ (Theorem 6.13).

To accomplish this procedure we first reformulate the notion of an automaton as follows and introduce the notion of the product of two automata. Let Π be a set called an *alphabet*.

Definition 6.8. *An automaton over Π is a triple $\mathfrak{A} = (Q, q, \pi)$, where (i) Q is a set, and (ii) $\pi : \Pi \times Q \dashrightarrow \Pi$ and $q : \Pi \times Q \dashrightarrow Q$ are partially defined maps with a common domain.*

It is often convenient to write an automaton $\mathfrak{A} = (Q, q, \pi)$ as a pair of partially defined maps $\tau = (q, \pi) : \Pi \times Q \dashrightarrow Q \times \Pi$. Given two automata $\mathfrak{A} = (Q_{\mathfrak{A}}, q_{\mathfrak{A}}, \pi_{\mathfrak{A}})$ and $\mathfrak{B} = (Q_{\mathfrak{B}}, q_{\mathfrak{B}}, \pi_{\mathfrak{B}})$ over a same alphabet Π we define their product $\mathfrak{A}\mathfrak{B} = (Q_{\mathfrak{A}} \times Q_{\mathfrak{B}}, q_{\mathfrak{A}\mathfrak{B}}, \pi_{\mathfrak{A}\mathfrak{B}})$ over Π, where $\tau_{\mathfrak{A}\mathfrak{B}} = (q_{\mathfrak{A}\mathfrak{B}}, \pi_{\mathfrak{A}\mathfrak{B}}) : \Pi \times Q_{\mathfrak{A}} \times Q_{\mathfrak{B}} \dashrightarrow Q_{\mathfrak{A}} \times Q_{\mathfrak{B}} \times \Pi$ is given by the successive compositions:

$$\Pi \times Q_{\mathfrak{A}} \times Q_{\mathfrak{B}} \dashrightarrow Q_{\mathfrak{A}} \times \Pi \times Q_{\mathfrak{B}} \dashrightarrow Q_{\mathfrak{A}} \times Q_{\mathfrak{B}} \times \Pi$$

of first $\tau_{\mathfrak{A}} = (q_{\mathfrak{A}}, \pi_{\mathfrak{A}})$ and next $\tau_{\mathfrak{B}} = (q_{\mathfrak{B}}, \pi_{\mathfrak{B}})$.

An automaton $\mathfrak{A} = (Q, q, \pi)$ over Π defines a binary relation $R_{\mathfrak{A}} \subset \Pi^{\mathbb{Z}} \times \Pi^{\mathbb{Z}}$. Let $\underline{\pi} = (\pi_n)_{n\in\mathbb{Z}}, \underline{\pi}' = (\pi'_n)_{n\in\mathbb{Z}} \in \Pi^{\mathbb{Z}}$ be two bi-infinite sequences. We say that $(\underline{\pi}, \underline{\pi}') \in \Pi^{\mathbb{Z}} \times \Pi^{\mathbb{Z}}$ belongs to $R_{\mathfrak{A}}$ if there exists a sequence $(q_n)_{n\in\mathbb{Z}} \in Q^{\mathbb{Z}}$ so that $q_{n+1} = q(\pi_n, q_n)$ and $\pi'_n = \pi(\pi_n, q_n)$ hold.

From an automaton $\mathfrak{A} = (Q, q, \pi)$ over an alphabet Π, one can construct a doubly labeled directed graph called the *Moore diagram* of $\mathfrak{A}$. Its vertex set is given by Q, and for $(\pi', q') \in \Pi \times Q$ in the common domain of π and q we draw an arrow from $q(\pi', q')$ to q' labeled by the pair $\pi'|\pi(\pi', q')$. Note that the direction of arrows defined here is opposite to the one in [BGN].

Definition 6.9. *Let $\mathfrak{A}$ be an automaton over Π. For $\underline{\pi} = (\pi_n)_{n\in\mathbb{Z}}, \underline{\pi}' = (\pi'_n)_{n\in\mathbb{Z}} \in \Pi^{\mathbb{Z}}$ we write $\underline{\pi} \sim_{\mathfrak{A}} \underline{\pi}$ if there exists a bi-infinite path in the Moore diagram of $\mathfrak{A}$ along which the sequence of labelings is $(\pi_n|\pi'_n)_{n\in\mathbb{Z}}$.*

This definition is consistent with the binary relation $R_{\mathfrak{A}}$. Namely, for $\underline{\pi}, \underline{\pi}' \in \Pi^{\mathbb{Z}}$ we have $(\underline{\pi}, \underline{\pi}') \in R_{\mathfrak{A}}$ if and only if $\underline{\pi} \sim_{\mathfrak{A}} \underline{\pi}'$. When the binary relation $R_{\mathfrak{A}}$ is an equivalence relation, we say that $\mathfrak{A}$ *generates the equivalence relation* $\sim_{\mathfrak{A}}$.

Given two binary relations $R_1, R_2 \subset \Pi^{\mathbb{Z}} \times \Pi^{\mathbb{Z}}$ in $\Pi^{\mathbb{Z}}$, their product $R_1R_2 \subset \Pi^{\mathbb{Z}} \times \Pi^{\mathbb{Z}}$ is defined as follows; we say $(\underline{\pi}^1, \underline{\pi}^2) \in R_1R_2$ iff there exists $\underline{\delta} \in \Pi^{\mathbb{Z}}$ so that $(\underline{\pi}^1, \underline{\delta}) \in R_1$ and $(\underline{\delta}, \underline{\pi}^2) \in R_2$ hold. Similarly, given two equivalence relations $\sim_1, \sim_2 \subset \Pi^{\mathbb{Z}} \times \Pi^{\mathbb{Z}}$ in $\Pi^{\mathbb{Z}}$, their product $\sim_1\sim_2$ is defined as the transitive closure of $\sim_1$ and $\sim_2$. In particular, we have

$$\sim_{\mathfrak{A}}\sim_{\mathfrak{B}} = \bigcup_{m>0} (R_{\mathfrak{A}}R_{\mathfrak{A}})^m$$

if two automata $\mathfrak{A}$ and $\mathfrak{B}$ generate the equivalence relations $\sim_{\mathfrak{A}}$ and $\sim_{\mathfrak{B}}$ respectively.

A key property in the construction of finite automata for Hénon maps is

Definition 6.10. *Let $M \geq 1$ and let $R_{\mathfrak{A}}$ and $R_{\mathfrak{B}}$ be the binary relations in $\Pi^{\mathbb{Z}}$ defined by automata $\mathfrak{A}$ and $\mathfrak{B}$ respectively. We say that the product $\mathfrak{A}\mathfrak{B}$ is M-boundedly generating in $\Pi^{\mathbb{Z}}$ if $R_{(\mathfrak{A}\mathfrak{B})^m} \subset R_{(\mathfrak{A}\mathfrak{B})^M}$ holds for every $m \geq 1$.*

Next we reformulate the holonomy equivalence in terms of certain inverse semigroup action. Choose $i, i' \in \Sigma^0$ with $i \neq i'$ so that $E(i, i') \neq \emptyset$ holds, i.e. $\mathcal{T}_i$ and $\mathcal{T}_{i'}$ are identified at some points by $\approx_{\mathfrak{L}^0}$. For $\cdots \pi_{-2}\pi_{-1} \in \Pi_i^{-\infty}$ and $\cdots \pi'_{-2}\pi'_{-1} \in \Pi_{i'}^{-\infty}$, we set $\iota_{\{i,i'\}}(\cdots \pi_{-2}\pi_{-1}) \equiv \cdots \pi'_{-2}\pi'_{-1}$ and $\iota_{\{i,i'\}}(\cdots \pi'_{-2}\pi'_{-1}) \equiv \cdots \pi_{-2}\pi_{-1}$ if either

(i) there exists $N \leq -1$ so that the subpaths $\cdots \pi_{N-1}\pi_N$ and $\cdots \pi'_{N-1}\pi'_N$ of the paths $\cdots \pi_{-2}\pi_{-1}$ and $\cdots \pi'_{-2}\pi'_{-1}$ respectively are identified in $T/_{\sim_{\mathrm{holo}}}$, or

(ii) $\cdots \pi_{-2}\pi_{-1}$ and $\cdots \pi'_{-2}\pi'_{-1}$ form an exceptional pair.

This gives an involution $\iota_{\{i,i'\}}$ from a subset of $\Pi_i^{-\infty} \sqcup \Pi_{i'}^{-\infty}$ to itself.

Definition 6.11. *The inverse semigroup generated by the maps $\iota_{\{i,i'\}}$ and the identity map on $\Pi^{-\infty} \equiv \bigsqcup_{i\in\Sigma^0} \Pi_i^{-\infty}$ is called the holonomy pinching group of the Hubbard tree $\mathfrak{T}$ and is denoted by $\mathcal{I}_{\mathfrak{T}}$.*

The holonomy pinching group $\mathcal{I}_{\mathfrak{T}}$ acts on $\Pi^{-\infty}$ faithfully and we denote its action of $\iota \in \mathcal{I}_{\mathfrak{T}}$ as $(\cdots \pi_{-2}\pi_{-1})^{\iota}$ for $\cdots \pi_{-2}\pi_{-1} \in \Pi^{-\infty}$. Note that $\mathcal{I}_{\mathfrak{T}}$ is similar to the *holonomy pseudogroup* in the foliation theory [CC, Ne2]. The holonomy equivalence relation in Definition 6.5 can be then expressed in terms of $\mathcal{I}_{\mathfrak{T}}$ as follows. Let $\underline{\pi} = (\pi_n)_{n\in\mathbb{Z}}, \underline{\pi}' = (\pi'_n)_{n\in\mathbb{Z}} \in \Pi^{\pm\infty}$. Then, $\underline{\pi} \sim_{\mathrm{holo}} \underline{\pi}'$ holds iff for any $n \in \mathbb{Z}$ there exists $\iota_n \in \mathcal{I}_{\mathfrak{T}}$ so that $(\cdots \pi_{n-1}\pi_n)^{\iota_n} = \cdots \pi'_{n-1}\pi'_n$ holds.

The notion of self-similarity of a group action is generalized to the setting of inverse semigroup actions in an appropriate way (see Definition 3.6 of [BGN]). One can show that the inverse semigroup actions of $\mathcal{I}_{\mathfrak{T}}$ and $\mathrm{IMG}(\widetilde{\mathfrak{T}})$ on $\Pi^{-\infty}$ are both self-similar and contracting. Let $\mathfrak{A}_{\mathrm{IMG}(\widetilde{\mathfrak{T}})}$ be the Moore diagram of the automaton $(\mathcal{N}_{\mathrm{IMG}(\widetilde{\mathfrak{T}})}, \pi_{\mathrm{IMG}(\widetilde{\mathfrak{T}})}, q_{\mathrm{IMG}(\widetilde{\mathfrak{T}})})$. Also, we denote by $\mathfrak{A}_{\mathcal{I}_{\mathfrak{T}}}$ the Moore diagram of the automaton $(\mathcal{N}_{\mathcal{I}_{\mathfrak{T}}}, \pi_{\mathcal{I}_{\mathfrak{T}}}, q_{\mathcal{I}_{\mathfrak{T}}})$. Denote by $\mathrm{card}(\Sigma^0)$ the cardinality of Σ^0. A key observation is that the product $\mathfrak{A}_{\mathrm{IMG}(\widetilde{\mathfrak{T}})}\mathfrak{A}_{\mathcal{I}_{\mathfrak{T}}}$ is $\mathrm{card}(\Sigma^0)$-boundedly generating in $\Pi^{\pm\infty}$ (Proposition 5.17 in [I3]). This motivates to define

Definition 6.12. *The $\mathrm{card}(\Sigma^0)$-th power $(\mathfrak{A}_{\mathrm{IMG}(\widetilde{\mathfrak{T}})}\mathfrak{A}_{\mathcal{I}_{\mathfrak{T}}})^{\mathrm{card}(\Sigma^0)}$ of the product $\mathfrak{A}_{\mathrm{IMG}(\widetilde{\mathfrak{T}})}\mathfrak{A}_{\mathcal{I}_{\mathfrak{T}}}$ is called the automaton for a Hubbard tree $\mathfrak{T}$ and denoted by $\mathfrak{A}_{\mathfrak{T}}$.*

Let $\mathfrak{T}$ be a Hubbard tree and $\Pi^{\pm\infty}$ be the subshift of finite type associated to it. Let $\mathfrak{A}_{\mathfrak{T}}$ be the automaton for $\mathfrak{T}$. Recall that for $\underline{\pi} = (\pi_n)_{n\in\mathbb{Z}}, \underline{\pi}' = (\pi'_n)_{n\in\mathbb{Z}} \in \Pi^{\pm\infty}$, we write $\underline{\pi} \sim_{\mathfrak{A}_{\mathfrak{T}}} \underline{\pi}'$ if there exists a bi-infinite path in $\mathfrak{A}_{\mathfrak{T}}$ so that the sequence of labelings along the path is $(\pi_n|\pi'_n)_{n\in\mathbb{Z}}$.

Theorem 6.13 (Ishii [I3])**.** *Let $\iota_{\mathcal{A}}, f : \mathcal{A}^1 \to \mathcal{A}^0$ be a hyperbolic system and let $\mathfrak{T}$ be its Hubbard tree. If $\mathcal{A}^{\pm\infty}$ is a hyperbolic set and $J_f \subset \mathcal{A}^0$, then $f : J_f \to J_f$ is topologically conjugate to the factor $\sigma/_{\sim_{\mathfrak{A}_{\mathfrak{T}}}} : \Pi^{\pm\infty}/_{\sim_{\mathfrak{A}_{\mathfrak{T}}}} \to \Pi^{\pm\infty}/_{\sim_{\mathfrak{A}_{\mathfrak{T}}}}$ of the shift map.*

On the other hand, no tight automata theory for Hénon maps is established yet.

7. Exploring the parameter space of the Hénon family

In this section we investigate the complex quadratic Hénon family:

$$f_{c,b} : (x, y) \longmapsto (x^2 + c - by, x)$$

where $(c, b) \in \mathbb{C} \times \mathbb{C}^\times$. Let us call $\mathbb{C} \times \mathbb{C}^\times$ the *parameter space* of the complex Hénon family. Currently it is a far reaching problem to establish a dynamics-parameter correspondence for such complex 2-dimensional dynamical systems. However, there is a series of interesting conjectures which could be a hint towards this problem. In Subsections 7.1 and 7.2 we explain these conjectures which are based on numerical experiments.

7.1. **Is ρ surjective?** Write $\Sigma_2 \equiv \{A, B\}$ and denote by

$$\Sigma_2^{\mathbb{Z}} \equiv \left\{ \cdots \varepsilon_{-1} \cdot \varepsilon_0 \varepsilon_1 \cdots : \varepsilon_i \in \Sigma_2 \right\}$$

the space of all two-sided symbol sequences over Σ_2. We also consider the shift map $\sigma : \Sigma_2^{\mathbb{Z}} \to \Sigma_2^{\mathbb{Z}}$ given by $\sigma(\cdots \varepsilon_{-1} \cdot \varepsilon_0 \varepsilon_1 \cdots) \equiv \cdots \varepsilon_{-1} \varepsilon_0 \cdot \varepsilon_1 \cdots$.

We say that a complex Hénon map is a *hyperbolic horseshoe on* $\mathbb{C}^2$ if its Julia set $J_{c,b}$ is a hyperbolic set and $f_{c,b} : J_{c,b} \to J_{c,b}$ is topologically conjugate to the shift map $\sigma : \Sigma_2^{\mathbb{Z}} \to \Sigma_2^{\mathbb{Z}}$, where $\Sigma_2^{\mathbb{Z}}$ is the space of bi-infinite symbol sequences with two symbols. The *complex hyperbolic horseshoe* locus is defined as

$$\mathcal{H}_{\mathbb{C}} \equiv \left\{ (c, b) \in \mathbb{C} \times \mathbb{C}^\times : f_{c,b} \text{ is a hyperbolic horseshoe on } \mathbb{C}^2 \right\}$$

Note that we do not know if $\mathcal{H}_{\mathbb{C}}$ is connected. We define the *shift locus* $\mathcal{S}_{c,b}$ for the complex Hénon family as the connected component of $\mathcal{H}_{\mathbb{C}}$ containing the region $\mathcal{H}_{\mathrm{OV}} \equiv \{(c, b) \in \mathbb{C} \times \mathbb{C}^\times : |c| > 2(1 + |b|)^2\}$ found in [Ob] (see (1) of Corollary 5.7).

Fix $(c_0, b_0) \in \mathcal{H}_{\mathrm{OV}}$. As in the case of polynomial maps in one complex variable (see item (viii) in Section 1), we have an anti-homomorphism:

$$\rho : \pi_1(\mathcal{S}_{c,b}, (c_0, b_0)) \longrightarrow \mathrm{Aut}(\Sigma_2^{\mathbb{Z}}, \sigma)$$

satisfying $\rho(\gamma_1 \cdot \gamma_2) = \rho(\gamma_2)\rho(\gamma_1)$, where $\mathrm{Aut}(\Sigma_2^{\mathbb{Z}}, \sigma)$ is the group of homeomorphisms $\tau : \Sigma_2^{\mathbb{Z}} \to \Sigma_2^{\mathbb{Z}}$ which commutes with the shift map σ on $\Sigma_2^{\mathbb{Z}}$. We call ρ the *monodromy presentation* of the fundamental group $\pi_1(\mathcal{S}_{c,b}, (c_0, b_0))$.

Conjecture 7.1 (Hubbard, see [BS$_{\mathbb{CR}}$])**.** *The image $\rho(\pi_1(\mathcal{S}_{c,b}, (c_0, b_0)))$ together with the shift map $\sigma : \Sigma_2^{\mathbb{Z}} \to \Sigma_2^{\mathbb{Z}}$ generate* $\mathrm{Aut}(\Sigma_2^{\mathbb{Z}}, \sigma)$.

It is easy to see that the locus $\mathcal{H}_{\mathbb{C}}$ is not simply connected; take a loop $\gamma(t) = (c(t), b_0) \in \mathcal{H}_{\mathrm{OV}}$ where $c(t)$ is a large loop surrounding the Mandelbrot set once with $c(0) = c_0$, then $\rho(\gamma)$ exchanges the two symbols A and B. Moreover, Arai [A] found an element $\gamma \in \pi_1(\mathcal{S}_{c,b}, (c_0, b_0))$ so that $\rho(\gamma)$ has infinite order.

One of the reasons why Conjecture 7.1 seems much more difficult to prove than Theorem 1.22 is that the group $\mathrm{Aut}(\Sigma_2^{\mathbb{Z}}, \sigma)$ is "huge" compared to $\mathrm{Aut}(\Sigma_2^{\mathbb{N}_0}, \sigma)$. For example, it is known that $\mathrm{Aut}(\Sigma_2^{\mathbb{Z}}, \sigma)$ contains every finite group and the direct sum of countably many copies of $\mathbb{Z}$, and no convenient system of generators is known.

7.2. **Lipa's conjectures.** Since the complex Hénon map is a diffeomorphism, it does not possess critical points in the usual sense. Therefore, one can not expect to obtain a "magic formula" as in item (ix) in Section 1 for the complex Hénon family. Here we propose two conjectures following the thesis of Chris Lipa [L] concerning the dynamics-parameter correspondence in the complex Hénon family. To do this, we investigate detailed combinatorial structure of the Mandelbrot set $\mathcal{M}$ based on Theorem 1.26.

Let H be a hyperbolic component of the Mandelbrot set $\mathcal{M}$. Theorem 1.26 implies that the union $R_{\mathcal{M}}(\theta_H^-) \cup R_{\mathcal{M}}(\theta_H^+) \cup \{r_{\mathcal{M}}(H)\}$ divide the complex plane into two parts when $H \neq \heartsuit$, and we also have $R_{\mathcal{M}}(\theta_\heartsuit^-) \cup R_{\mathcal{M}}(\theta_\heartsuit^+) \cup \{r_{\mathcal{M}}(\heartsuit)\} = [1/4, +\infty)$.

Definition 7.2. *The connected component of* $\mathbb{C} \setminus (R_{\mathcal{M}}(\theta_H^-) \cup R_{\mathcal{M}}(\theta_H^+) \cup \{r_{\mathcal{M}}(H)\})$ *containing* H *is called the wake associated with* H *and denoted by* $\mathcal{W}_H$.

One can associate the notion of a kneading sequence with each wake as follows [LS, L] whose idea originates in Milnor–Thurston theory for maps of the interval [MT]. Let H be a hyperbolic component and let $k(H)$ be the period of the unique attractive cycle of p_c with $c \in H$. Given $\theta \in \mathbb{T}$, we define $K_H^+(\theta) = (i_n^+)_{n \geq 0} \in \Sigma_2^{\mathbb{N}_0}$ as

$$i_n^+ \equiv \begin{cases} A & \text{if} \quad 2^n\theta \in [\frac{\theta+1}{2}, \frac{\theta}{2}) \\ B & \text{if} \quad 2^n\theta \in [\frac{\theta}{2}, \frac{\theta+1}{2}), \end{cases}$$

for $n \geq 0$, and $K_H^-(\theta) = (i_n^-)_{n \geq 0} \in \Sigma_2^{\mathbb{N}_0}$ as

$$i_n^- \equiv \begin{cases} A & \text{if} \quad 2^n\theta \in (\frac{\theta+1}{2}, \frac{\theta}{2}] \\ B & \text{if} \quad 2^n\theta \in (\frac{\theta}{2}, \frac{\theta+1}{2}]. \end{cases}$$

for $n \geq 0$. One can then show that $K^+(\theta_H^-) = K^-(\theta_H^+)$ holds if $H \neq \heartsuit$.

Definition 7.3. *The kneading sequence of the wake* $\mathcal{W}_H$ *associated with* $H \neq \heartsuit$ *is the first* $k(H)$ *letters of the sequence* $K^+(\theta_H^-) = K^-(\theta_H^+)$ *and is denoted by* $K(\mathcal{W}_H)$*, where* $k(H)$ *is the period of the unique attractive cycle of* p_c *for* $c \in H$*. We also set* $K(\mathcal{W}_\heartsuit) \equiv A$.

We define the *discarded kneading sequence* of the wake $\mathcal{W}_H$ as the first $k(H) - 1$ letters of the sequence $K^+(\theta_H^-) = K^-(\theta_H^+)$ and denote it by $\widehat{K}(\mathcal{W}_H)$. We also set $\widehat{K}(\mathcal{W}_\heartsuit)$ to be the empty word ϵ.

Here is a list of examples:

- When $H = \heartsuit$ is the Main Cardioid, we have $\theta_\heartsuit^- = 0$, $\theta_\heartsuit^+ = 1$ and $k(\heartsuit) = 1$. Since $K(\mathcal{W}_\heartsuit) = A$ holds, we see $\widehat{K}(\mathcal{W}_\heartsuit) = \epsilon$.
- When H is the Basilica component, we have $\theta_H^- = 1/3$, $\theta_H^+ = 2/3$ and $k(H) = 2$. Since $K(\mathcal{W}_H) = BA$ holds, we see $\widehat{K}(\mathcal{W}_H) = B$.
- When H is the Rabbit component, we have $\theta_H^- = 1/7$, $\theta_H^+ = 2/7$ and $k(H) = 3$. Since $K(\mathcal{W}_H) = BBA$ holds, we see $\widehat{K}(\mathcal{W}_H) = BB$.
- When H is the Airplane component, we have $\theta_H^- = 3/7$, $\theta_H^+ = 4/7$ and $k(H) = 3$. Since $K(\mathcal{W}_H) = BAA$ holds, we see $\widehat{K}(\mathcal{W}_H) = BA$.

Another consequence of Theorem 1.26 is that the Mandelbrot set $\mathcal{M}$ has a tree-like structure. More precisely, it yields that either $\mathcal{W}_H \supset \mathcal{W}_{H'}$, $\mathcal{W}_H \subset \mathcal{W}_{H'}$ or $\mathcal{W}_H \cap \mathcal{W}_{H'} = \emptyset$ holds for two hyperbolic components H and H' of $\mathcal{M}$.

Definition 7.4. *Let* H *and* H' *be two hyperbolic components of* $\mathcal{M}$*. We say that the wake* $\mathcal{W}_{H'}$ *is conspicuous to the wake* $\mathcal{W}_H$ *if*

(1) $\mathcal{W}_{H'} \subset \mathcal{W}_H$,
(2) $k(H') \leq k(H)$,
(3) *there are no hyperbolic components* H'' *with* $k(H'') < k(H')$ *and* $\mathcal{W}_{H'} \subset \mathcal{W}_{H''} \subset \mathcal{W}_H$.

We remark that a wake is always conspicuous to itself.

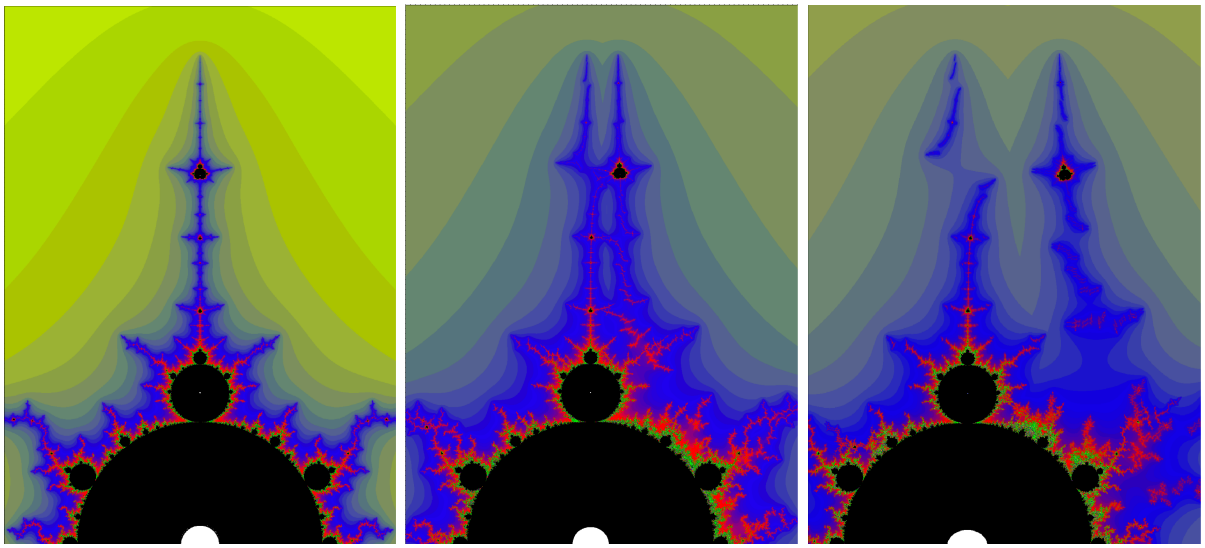

FIGURE 17. The c-planes with $b = 0$ (left), $b = 0.015i$ (middle) and $b = 0.05i$ (right) [L].

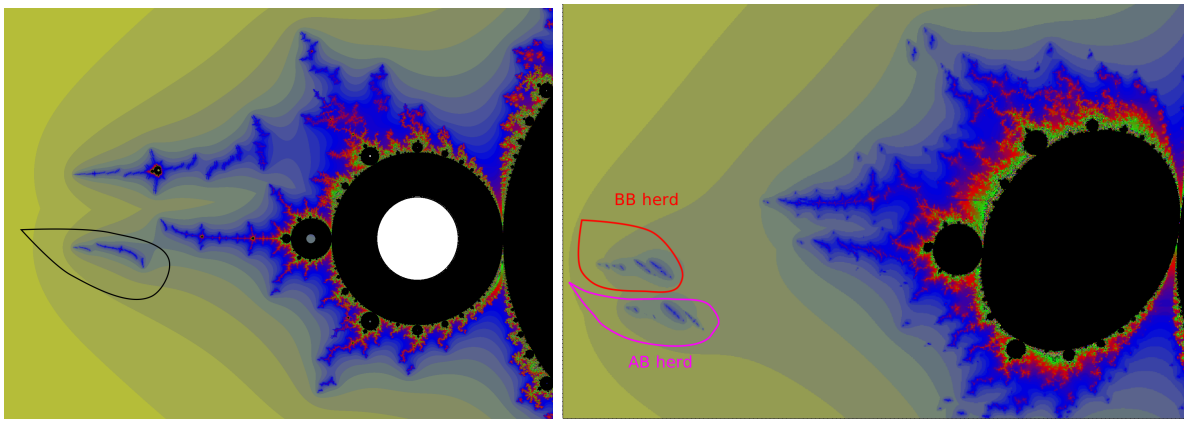

FIGURE 18. A loop surrounding the B-herd of Airplane wake with $b = 0.05i$ (left) which splits to the BB-herd and the AB-herd with $b = 0.2+0.3i$ (right) [L].

Through her numerical experiments with SaddleDrop, S. Koch [L, Ko2] observed the "splitting phenomenon" of the Mandelbrot set $\mathcal{M}$. Based on this phenomenon she defined (naively) the notion of *herds* as follows.

Suppose first that $b = 0$ and look at the c-plane in the parameter space (see the left picture in Figure 17); we then see the Mandelbrot set $\mathcal{M}$ in the c-plane. If we change b slightly, we still have a Mandelbrot-like set in the corresponding c-plane to which we still have a well-defined notion of wakes.

Let $\mathcal{W}_H$ be a wake of the Mandelbrot-like set with $k(H) = 2$. As we perturb b more, the wake $\mathcal{W}_H$ seems to split into two different pieces (see the middle picture in Figure 17). One, called the *A-herd* of $\mathcal{W}_H$, which contains all the wakes in $\mathcal{W}_H$ whose discarded kneading sequences end in A, moves to the direction in the c-plane that b is perturbed in. The other, called the *B-herd* of $\mathcal{W}_H$, which contains all the wakes in $\mathcal{W}_H$ whose discarded kneading sequence end in B, moves in the opposite direction (see the right picture in Figure 17).

Let $\mathcal{W}_{H'}$ be a wake of the Mandelbrot-like set with $k(H') = 3$ and $\mathcal{W}_{H'} \subset \mathcal{W}_H$. As we perturb b even more, the *A-herd* of $\mathcal{W}_H$ inside $\mathcal{W}_{H'}$ splits into two pieces. One, called the *AA-herd* of $\mathcal{W}_{H'}$, which contains all the wakes in $\mathcal{W}_{H'}$ whose discarded kneading sequences end in AA, moves a bit farther to the direction in the c-plane that b is perturbed in than the other, called the *BA-herd* of $\mathcal{W}_{H'}$, which contains all the wakes in $\mathcal{W}_{H'}$ whose discarded kneading sequence end in BA. Similarly, the *B-herd* of $\mathcal{W}_H$ inside $\mathcal{W}_{H'}$ (see the left picture in Figure 18) splits into two pieces; the *AB-herd* of $\mathcal{W}_{H'}$ and the *BB-herd* of $\mathcal{W}_{H'}$ (see the right picture in Figure 18).

After one more splitting, we have 8 herds associated with discarded kneading sequences in the following order: AAB, BAB, BBB, ABB, ABA, BBA, BAA, AAA (note that the parity of the number of the letter B flips the lexicographical order). In this way we obtain the notion of the *$\underline{v}$-herd* of a wake $\mathcal{W}_H$ for a word $\underline{v}$ over the alphabet $\Sigma_2 = \{A, B\}$. According to [L], this splitting phenomenon has been observed numerically using SaddleDrop to a depth of 5.

Below the length of a word $\underline{w}$ over the alphabet $\{A, B, *\}$ is denoted by $|\underline{w}|$. Given a word $\underline{w}$ over $\{A, B, *\}$ containing exactly one $*$, we will define a continuous map $\tau_{\underline{w}} : \Sigma_2^{\mathbb{Z}} \to \Sigma_2^{\mathbb{Z}}$ as follows. Take a sequence $\underline{\varepsilon} = (\varepsilon_n)_{n\in\mathbb{Z}} \in \Sigma_2^{\mathbb{Z}}$. If there exist $k \in \mathbb{Z}$ with $\varepsilon_k \cdots \varepsilon_{k+|\underline{w}|-1} = \underline{w}$ except for the digit of $*$ in $\underline{w}$, we replace the letter in the corresponding digit in $\underline{w}$ to the opposite one (i.e. A to B and B to A). If there is no such $k \in \mathbb{Z}$, $\underline{\varepsilon}$ is left unchanged. By operating the above procedure to all possible $k \in \mathbb{Z}$, we obtain a new sequence denoted by $\tau_{\underline{w}}(\underline{\varepsilon}) \in \Sigma_2^{\mathbb{Z}}$.

Definition 7.5. *Let $W \equiv \{\underline{w}^1, \ldots, \underline{w}^m\}$ be a set of finite words over $\{A, B, *\}$, each containing exactly one $*$. Assume that $\tau_{\underline{w}^1}, \ldots, \tau_{\underline{w}^m}$ are all commutative with each other with respect to the composition of the maps. Then,*

$$\tau_W \equiv \tau_{\underline{w}^m} \circ \cdots \circ \tau_{\underline{w}^1} : \Sigma_2^{\mathbb{Z}} \longrightarrow \Sigma_2^{\mathbb{Z}}$$

is called a compound marker endomorphism given by W. If a compound marker endomorphism is an automorphism, it is called a compound marker automorphism.

Now we are in position to state the first conjectures of Lipa (Conjecture 8.3 in [L]).

Conjecture 7.6. *Let $\mathcal{W}_H$ be a wake with its conspicuous wakes $\mathcal{W}_{H_1}, \ldots, \mathcal{W}_{H_m}$ and let $\underline{v}$ be a word over $\{A, B\}$. Suppose that $\gamma \in \pi_1(\mathcal{S}_{c,b}, (c_0, b_0))$ winds around the $\underline{v}$-herd of the wake $\mathcal{W}_H$ and let $\underline{w}^i \equiv \underline{v} * K(\mathcal{W}_{H_i})$. Then, $\tau_{\underline{w}^1}, \ldots, \tau_{\underline{w}^m}$ are all commutative and the compound marker endomorphism τ_W given by $W \equiv \{\underline{w}^1, \ldots, \underline{w}^m\}$ coincides with $\rho(\gamma)$. In particular, it is an automorphism.*

When $\mathcal{W}_H$ is the Airplane wake, we have $K(\mathcal{W}_H) = BAA$. He observed that the monodromy action $\rho(\gamma)$ along the path γ in the left picture of Figure 18 coincides with τ_W, where $W = \{B * BAA\}$ (see Subsection 9.1 of [L]). Similarly, he observed such coincidence of $\rho(\gamma)$ for the two loops in the right picture of Figure 18 and τ_W with $W = \{BB*BAA\}$ and $W = \{AB*BAA\}$ respectively (see Subsection 9.2 of [L]).

In Conjecture 8.4 of [L], Lipa proposed the following "converse" to Conjecture 7.6.

Conjecture 7.7. *Let $\mathcal{W}_H$ be a wake with its conspicuous wakes $\mathcal{W}_{H_1}, \ldots, \mathcal{W}_{H_m}$ and $\underline{v}$ be a word over $\{A, B\}$. Let $\underline{w}^i \equiv \underline{v} * K(\mathcal{W}_{H_i})$ and assume that $\tau_{\underline{w}^1}, \ldots, \tau_{\underline{w}^m}$ are all commutative. Suppose that the compound marker endomorphism τ_W given by $W \equiv \{\underline{w}^1, \ldots, \underline{w}^m\}$ is not an automorphism. Then, there is no $\gamma \in \pi_1(\mathcal{S}_{c,b}, (c_0, b_0))$ which winds around the $\underline{v}$-herd of $\mathcal{W}_H$.*

For example, Lipa showed that τ_W with $W = \{A * BAA\}$ is not a compound marker automorphism and claims that he was not able to find a loop in the horseshoe locus that winds only around the A-herd of the Airplane wake in Subsection 9.3 of [L]. See Subsections 9.5 and 9.6 of [L] for more examples and related discussions.

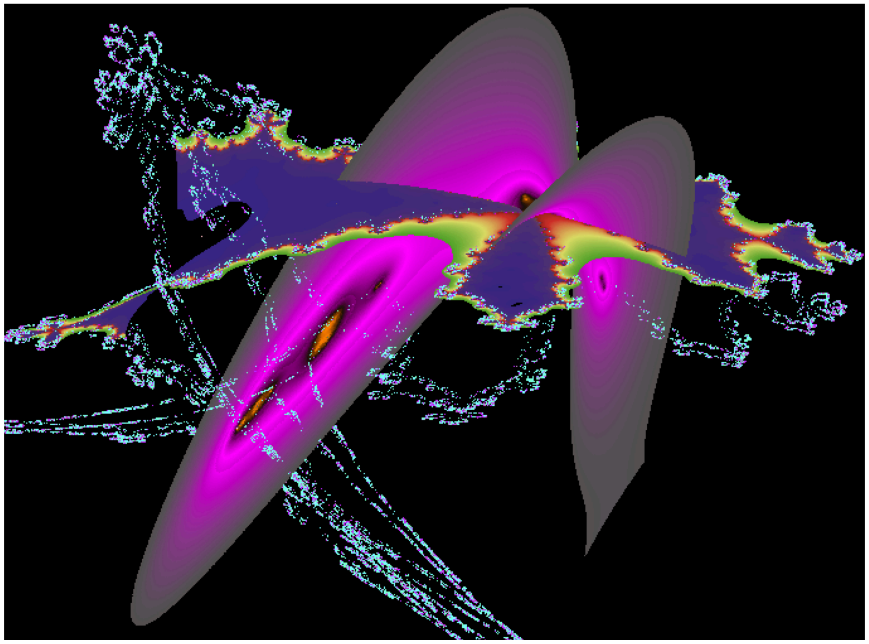

FIGURE 19. Close to a heteroclinic tangency [U1].

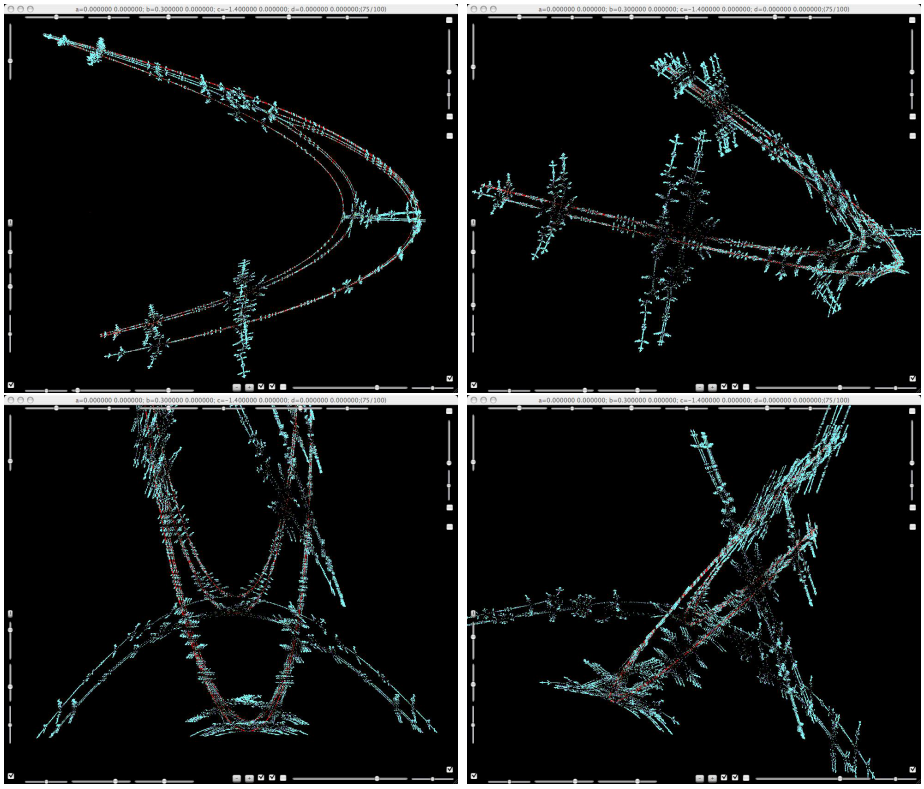

FIGURE 20. Hénon map at the classical parameter [U1].

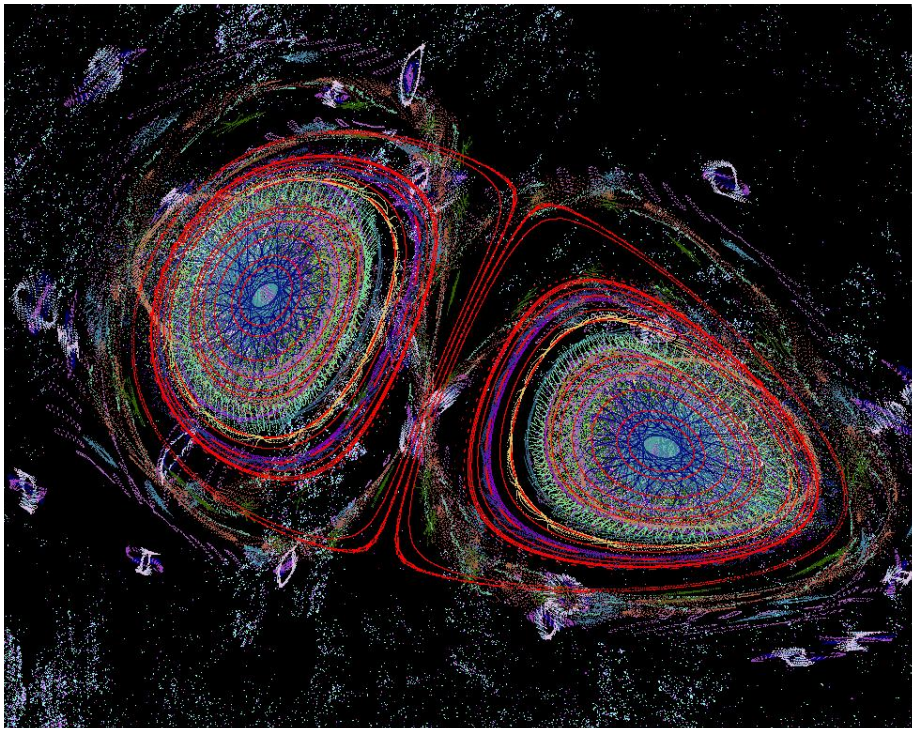

FIGURE 21. Volume preserving Hénon map with KAM circles [U1].

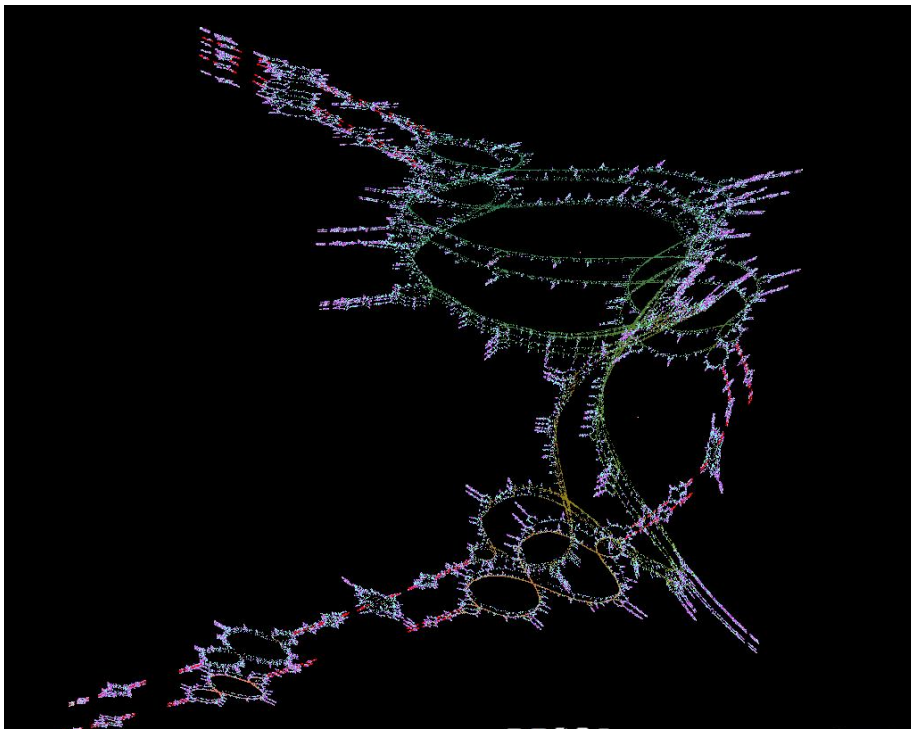

FIGURE 22. Hénon map with coexisting attractive cycles [U1].

7.3. **Visualization in $\mathbb{C}^2$.** There are several programs to draw the Julia sets and parameter loci of the Henon family $f_{a,b} : (x, y) \mapsto (x^2 - a - by, x)$ in $\mathbb{C}^2$ which are extremely useful for theoretical considerations of the dynamics. FractalAsm [FA] and SaddleDrop [SD] are created by Cornell Dynamics group (see Subsection 3.1). S. Ushiki [U1] made programs called *HénonExplorer* and *StereoViewer*; Figures 1, 19, 20, 21 and 22 are drawn by these programs. These pictures present sets in four-dimensional space, and this software helps to visualize these pictures by showing them under different projections to the two-dimensional computer screen, or onto a stereo 3D viewer. An important feature is that the viewer allows the set to be viewed as it is rotated in 4D space. We recommend to visit his webpage [U1] where more images can be found.

Figures 1 and 19 are drawn by HénonExplorer and Figures 20, 21 and 22 are drawn by StereoViewer. Each of these figures shows a "cloud" of points which are colored whitish blue. These are the periodic points of periods up to 20 for a Hénon map f. Asymptotically, most periodic points are of saddle type, and the asymptotic distribution of the saddle periodic points gives the unique maximal entropy measure μ_f of f (see [BLS2]). Thus this cloud of points approximates the set J_f^*, which is defined as the support of the measure μ_f (see Footnote 5 in Subsection 2.2). For the maps of Figures 1 and 19, there are two saddle fixed points, and the surfaces shown in the figures are portions of the stable and unstable manifolds. Note that if we wish to display stable or unstable manifolds, we need to truncate them. This is because the stable and unstable manifolds of any saddle periodic point have homoclinic intersection, hence they return arbitrary close to the periodic point (see [BLS1]).

In Figure 1 there are two saddle fixed points close to each other which are bifurcated from a parabolic fixed point. The rectangular surface colored orange/brown is a piece of the stable manifold of one of the two saddle fixed points (there is a similar cyan-colored region, corresponding to the other saddle fixed point.) The darker shading corresponds to the values of G^-; the darkest part indicates points of J^-, where $G^-(x, y) = 0$. The other two surfaces are portions of the unstable manifolds, cut off so as not to obscure other portions of the picture. The shading corresponds to the value of G^+, with the darkest part showing the points of J^+. These saddle points in Figure 1 are bifurcated from a map with a semi-parabolic fixed point. This bifurcation corresponds to a "parabolic implosion", which we can see because the fixed points show the spiraling behavior seen with the parabolic explosion of the familiar one-dimensional "cauliflower" Julia set. Such bifurcations were studied in detail by Bedford–Smillie–Ueda [BSU], and it is interesting to compare Figure 1 with the figures in [BSU].

Figure 19 describes the dynamics of a Hénon map which has an almost tangential heteroclinic intersection. In the figure, the truncated surface colored green/yellow/red surrounding the one-dimensional-like filled Julia set in purple represents a part of the unstable manifold of a saddle fixed point. The other surface colored pink, which looks like an arch, represents the stable manifold of another saddle fixed point. As in Figure 1, the darkness of the shading corresponds to the value of $G^\pm$, and the darkest part indicates points of $J^\pm$ where the surfaces intersect with the whitish blue cloud of points. The two surfaces intersect with each other almost tangentially at the "saddle point" of the arch, but this intersection does not belong to $\mathbb{R}^2$.

Figure 20 describes the support J_f^* of the maximal entropy measure for the Hénon map $f_{a,b}$ at the classical parameter $(a, b) = (1.4, -0.3)$ [Hé] seen from different directions. In each figure one can find the well-known strange attractor embedded in the picture which is the closure of the real unstable manifold of a saddle fixed point in the first quadrant of $\mathbb{R}^2$. The attractor is decorated with portions of J_f^* not in the real plane. These are the "pruned branches" emanating into the imaginary directions. When we change the direction of our view-point as in the figures, these directions are twisted unexpectedly. These pruned branches become smaller when the parameter a increases, and eventually disappear when $f_{a,b}$ becomes a horseshoe on $\mathbb{R}^2$.

Figures 21 describes the dynamics of a real Hénon map which preserves the area in $\mathbb{R}^2$. The large red curves are the KAM invariant circles of period two sitting in the real plane on which the twice iterate of $f_{a,b}$ is topologically conjugate to an irrational rotation. One can also observe the nested structure of smaller KAM circles in red and the so-called chaotic sea in purple/yellow where the Lyapunov exponent is conjecturally strictly positive. Blue and green points represent orbits of randomly chosen initial points near the complex extensions of the KAM circles. They seem to present quasi-periodic motions, but we do not know if their orbit closures form tori.

Figure 22 describes J_f^* of a Hénon map which possesses two attractive cycles of periods one and three respectively. The set J_f^* looks disconnected and hyperbolic (since it seems to satisfy the *cigar condition*; see [$\mathrm{BS}_{\mathbb{C}}7$] for more details). The largest circle in J_f^* as well as its images belong to the boundary of the attractive basin of period one, and the other circles belong to the boundary of the attractive basins of period three. Locally J_f^* looks like the product of a portion of a one-dimensional-like Julia set and a Cantor set. However, since this map is quadratic and has two attractive cycles, one can show that it is non-planar (by assuming its hyperbolicity).

Let us explain some mathematical background behind Ushiki's programs. In these programs we first compute periodic points of the Hénon map f of period m, say $m \leq 20$. This means that we need to find all points $(x, y) \in \mathbb{C}^2$ satisfying $f^m(x, y) = (x, y)$. However, this is a polynomial equation of degree 2^m and, when m is large, it is practically impossible to find the zeros of the equation with such large degree by Newton's root-finding algorithm because the size of the attractive basins for the solutions can be extremely small.

To overcome this difficulty, Ushiki employed an algorithm of Biham and Wenzel [BW1, BW2], now called the *BW-algorithm*. For a given symbol sequence $(\varepsilon_n)_{n\in\mathbb{Z}} \in \{+1, -1\}^{\mathbb{Z}}$, the algorithm consists of the following infinitely many ordinary differential equations:

$$\frac{d}{dt}s_n(t) = \varepsilon_n \cdot \{s_{n+1}(t) - s_n(t)^2 + a + bs_{n-1}(t)\}, \tag{4}$$

where $s_n(t)$ is a $\mathbb{C}$-valued function. Note that an equilibrium $(s_n^*)_{n\in\mathbb{Z}}$ of the system (4) satisfies the recursion equation $s_{n+1}^* = (s_n^*)^2 - a - bs_{n-1}^*$, which is equivalent to $(s_{n+1}^*, s_n^*) = f_{a,b}^n(s_1^*, s_0^*)$. In particular, by taking $(\varepsilon_n)_{n\in\mathbb{Z}}$ as a periodic sequence, an equilibrium of (4) corresponds to a periodic point of $f_{a,b}$. Biham and Wenzel [BW1, BW2] conjectured that (4) has a unique (globally attracting) equilibrium $(s_n^*)_{n\in\mathbb{Z}}$ for any $(\varepsilon_n)_{n\in\mathbb{Z}} \in \{+1, -1\}^{\mathbb{Z}}$ and $(a, b) \in \mathbb{C} \times \mathbb{C}^\times$, and the correspondence $(\varepsilon_n)_{n\in\mathbb{Z}} \mapsto (s_n^*)_{n\in\mathbb{Z}}$ from $\{+1, -1\}^{\mathbb{Z}}$ to the space of all bounded bi-infinite orbits of $f_{a,b}$ in $\mathbb{C}^2$ is bijective. Although a counter-example was found for $(a, b) = (1, 0.54)$ in [GKM] where (4) has a limit cycle for certain $(\varepsilon_n)_{n\in\mathbb{Z}}$, the BW-algorithm is practically a very useful algorithm to find periodic points. It would be interesting to give a rigorous proof of its convergence for reasonable initial data $(s_n(0))_{n\in\mathbb{Z}}$ and appropriate choice of parameter (a, b). Note that Sterling–Meiss [SM] justified the convergence of the algorithm in $\mathbb{R}^2$ for $a > 0$ large by employing the idea of anti-integrable limits and Mummert [Mu] extended their convergence result to other cases in $\mathbb{C}^2$.

As we saw above, the images drawn by HénonExplorer/StereoViewer are presented as objects in the two/three-dimensional space. However, the actual Julia sets are in $\mathbb{C}^2$ which has real dimension four. As we observe especially through Figure 20, it is hard to imagine how they are sitting in the four-dimensional space. Recently we have launched a 4D visualization project called *Watch_H* [AAIIKT]. The goal of the project is to express the images related to complex dynamics as fractal objects in the four-dimensional space and make an archive of such images (dynamical and parameter spaces for the Hénon family, dynamics on complex surfaces, etc). Towards this goal, we plan to employ a 3D virtual reality system, analyze the rotation in the four-dimensional space and develop new rendering techniques adapted to it.

8. Applications to the dynamics of Hénon maps in $\mathbb{R}^2$

In this section we discuss the problems (x). In Subsection 8.1 we study global topology of two real parameter loci and in Subsection 8.2 we investigate local geometry of their boundaries and apply it to the study of ground states at "temperature zero".

8.1. **Two real loci.** Let f be a polynomial diffeomorphism of $\mathbb{C}^2$ and let $d \geq 2$ be its degree. We say that f is *real* if all the coefficients of f are real. In this case, the restriction $f|_{\mathbb{R}^2} : \mathbb{R}^2 \to \mathbb{R}^2$ is a well-defined dynamical system. It is known [FM] that the topological entropy of $f|_{\mathbb{R}^2}$ satisfies $0 \leq h_{\mathrm{top}}(f|_{\mathbb{R}^2}) \leq \log d$ for any real f of degree d. We therefore say that a real polynomial diffeomorphism f attains the *maximal entropy* if $h_{\mathrm{top}}(f|_{\mathbb{R}^2}) = \log d$.

In [BS$_{\mathbb{C}}$8] Bedford and Smillie developed the theory of *quasi-hyperbolicity*. An important example of a quasi-hyperbolic map is a real polynomial diffeomorphism f with maximal entropy. Based on this theory, they have solved the so-called "first tangency problem" as follows.

Theorem 8.1 (Bedford–Smillie [BS$_{\mathbb{R}}$1])**.** *Assume that a real polynomial diffeomorphism f attains the maximal entropy. Then, either $f|_{\mathbb{R}^2}$ is uniformly hyperbolic on the non-wandering set $\Omega(f|_{\mathbb{R}^2})$ or has a tangency between stable and unstable manifolds.*

Hereafter, we restrict our attention to the following form of the Hénon family:

$$f_{a,b} : (x, y) \longmapsto (x^2 - a - by, x), \quad (a, b) \in \mathbb{R} \times \mathbb{R}^\times$$

as dynamical systems on $\mathbb{R}^2$. Let us call $\mathbb{R} \times \mathbb{R}^\times$ the *parameter space* for the real Hénon family $f_{a,b}$. When $b \neq 0$ is fixed and a is large enough, $f_{a,b}$ is a *hyperbolic horseshoe on* $\mathbb{R}^2$, i.e. the restriction of $f_{a,b}$ to its non-wandering set is uniformly hyperbolic and is topologically conjugate to the full shift with two symbols [DN]. Such $f_{a,b}$ attains the maximal entropy among the Hénon maps since we know $0 \leq h_{\mathrm{top}}(f_{a,b}) \leq \log 2$ for any $(a, b) \in \mathbb{R} \times \mathbb{R}^\times$ by [FM].

We are thus led to introduce the *hyperbolic horseshoe locus*:

$$\mathcal{H}_{\mathbb{R}} \equiv \left\{(a, b) \in \mathbb{R} \times \mathbb{R}^\times : f_{a,b} \text{ is a hyperbolic horseshoe on } \mathbb{R}^2\right\}$$

as well as the *maximal entropy locus*:

$$\mathcal{M}_{\mathbb{R}} \equiv \left\{(a, b) \in \mathbb{R} \times \mathbb{R}^\times : f_{a,b} \text{ attains the maximal entropy } \log 2\right\}.$$

Note that $\mathcal{H}_{\mathbb{R}}$ is open and $\mathcal{M}_{\mathbb{R}}$ is closed in $\mathbb{R} \times \mathbb{R}^\times$ (since $h_{\mathrm{top}}(f_{a,b})$ is a continuous function of (a, b) by results of Katok and Newhouse; see page 110 of [M1]), hence $\overline{\mathcal{H}_{\mathbb{R}}} \subset \mathcal{M}_{\mathbb{R}}$.

Theorem 8.2 (Bedford–Smillie [BS$_{\mathbb{R}}$2], Arai–Ishii [AI])**.** *There exists a real analytic function $a_{\mathrm{tgc}} : \mathbb{R}^\times \to \mathbb{R}$ from the b-axis to the a-axis of the parameter space for the Hénon family $f_{a,b}$ with $\lim_{b\to 0} a_{\mathrm{tgc}}(b) = 2$ so that*

(i) $(a, b) \in \mathcal{H}_{\mathbb{R}}$ *iff* $a > a_{\mathrm{tgc}}(b)$,
(ii) $(a, b) \in \mathcal{M}_{\mathbb{R}}$ *iff* $a \geq a_{\mathrm{tgc}}(b)$.

This result has been first obtained by Bedford and Smillie [BS$_{\mathbb{R}}$2] for the case $|b| < 0.06$ and then generalized to all $b \neq 0$ by Arai and the author [AI]. We note that, when $a = a_{\mathrm{tgc}}(b)$, the map $f_{a,b}$ has exactly one orbit of either homoclinic ($b > 0$) or heteroclinic ($b < 0$) tangencies of stable and unstable manifolds of suitable saddle fixed points [BS$_{\mathbb{R}}$1]. The strategy of [BS$_{\mathbb{R}}$2, AI] is first to extend the dynamical and the parameter spaces over $\mathbb{C}$, investigate their complex dynamical and complex analytic properties, and then reduce them to obtain conclusions over $\mathbb{R}$. In the article [AI] we also employ interval arithmetic together with some numerical algorithms such as set-oriented computations and the interval Krawczyk method to verify certain numerical criteria which imply analytic, combinatorial and dynamical consequences.

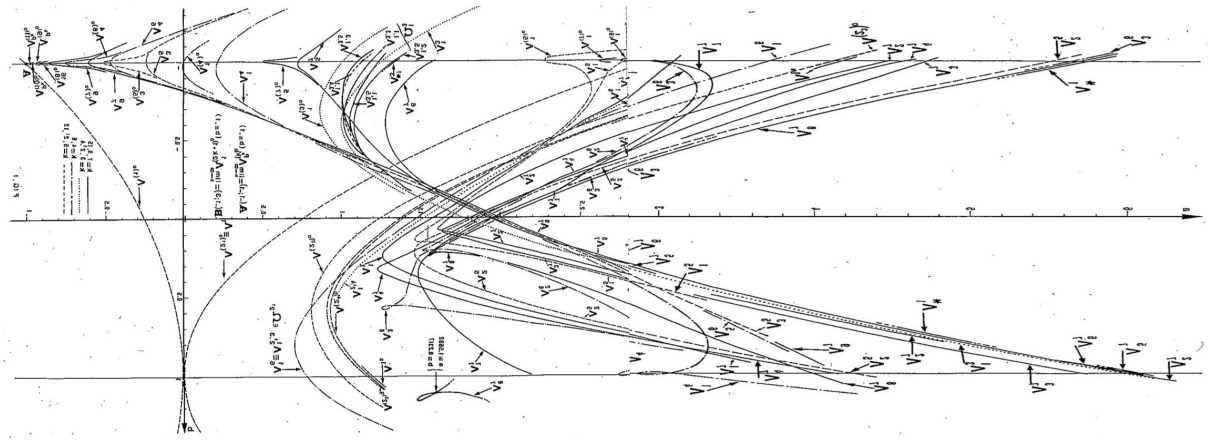

FIGURE 23. Bifurcation curves of the Hénon family [EM].

The statements described in Theorem 8.2 justify what were numerically observed at the beginning of 1980's by El Hamouly and Mira, Tresser, Ushiki and others. Figure 23 is obtained by joining two figures in the numerical work of El Hamouly and Mira [EM] and turning it upside down. There, the graph of the function a_{tgc} is implicitly figured out by the right-most wedge-shaped curve.

As a consequence of Theorem 8.2, we obtain some global topological properties of the two loci. To state them, let us put $\mathcal{H}_{\mathbb{R}}^{\pm} \equiv \mathcal{H}_{\mathbb{R}} \cap \{\pm b > 0\}$ and $\mathcal{M}_{\mathbb{R}}^{\pm} \equiv \mathcal{M}_{\mathbb{R}} \cap \{\pm b > 0\}$. Below, we take the closure and the boundary of $\mathcal{H}_{\mathbb{R}}^{\pm}$ and $\mathcal{M}_{\mathbb{R}}^{\pm}$ in $\{\pm b > 0\}$.

Corollary 8.3 (Arai–Ishii [AI]). *Both loci $\mathcal{H}_{\mathbb{R}}^{\pm}$ and $\mathcal{M}_{\mathbb{R}}^{\pm}$ are connected and simply connected in $\{\pm b > 0\}$. Moreover, we have $\overline{\mathcal{H}_{\mathbb{R}}^{\pm}} = \mathcal{M}_{\mathbb{R}}^{\pm}$ and $\partial\mathcal{H}_{\mathbb{R}}^{\pm} = \partial\mathcal{M}_{\mathbb{R}}^{\pm}$.*

We note that this corollary can be regarded as a first step towards the understanding of an "ordered structure" in the parameter space for the Hénon family. Recall that in [MTDS] the monotonicity of the topological entropy for the cubic family (which has two parameters) is formulated as the connectivity of the isentropes. Therefore, the above result indicates a weak form of monotonicity of the entropy function $(a, b) \mapsto h_{\mathrm{top}}(f_{a,b})$ at its maximal value.

It should be interesting to compare our results to the so-called *anti-monotonicity theorem* in [KKY]. To be precise, we let $h_t : \mathbb{R}^2 \to \mathbb{R}^2$ $(t \in \mathbb{R})$ be a one-parameter family of dissipative C^3-diffeomorphisms of the plane and assume that h_{t_0} has a non-degenerate homoclinic tangency at certain parameter $t = t_0$. Then, there are both infinitely many orbit-creation parameters and infinitely many orbit-annihilation parameters in any neighborhood of $t_0 \in \mathbb{R}$. It has been shown in [BS$_{\mathbb{R}}$2] that for the one-parameter family of Hénon maps $\{f_{a,b_*}\}_{a\in\mathbb{R}}$ with a fixed $b_* > 0$ sufficiently close to zero, the map at $a = a_{\mathrm{tgc}}(b_*)$ taken from the boundary $\partial\mathcal{H}_{\mathbb{R}}^{+} = \partial\mathcal{M}_{\mathbb{R}}^{+}$ has a non-degenerate homoclinic tangency. Of course, anti-monotonicity of some orbits does not necessarily imply anti-monotonicity of topological entropy. Nonetheless, the anti-monotonicity theorem suggests that, a priori, both $\mathcal{H}_{\mathbb{R}}$ and $\mathcal{M}_{\mathbb{R}}$ might have holes or several connected components separated from the largest one described in Corollary 8.3.

In their recent work [BS$_{\mathbb{R}}$3] Bedford and Smillie gave a characterization of the loci boundary for $|b| < 0.06$ in terms of symbolic dynamics with respect to a family of three polydisks. A similar characterization of the loci boundary should be possible for all values of b in terms of symbolic dynamics with respect to a family of four polydisks for $b > 0$ and a family of five polydisks for $b < 0$ constructed in [AI].

Further problems and questions follow:

- Is the function a_{tgc} monotone on $\{b > 0\}$ and on $\{b < 0\}$?
- Is the boundary of the zero-entropy locus piecewise real analytic (see [GT])? This is true when $|b|$ is close to zero [GST, CLM].
- Is the complex hyperbolic horseshoe locus $\mathcal{H}_{\mathbb{C}}$ for the complex Hénon family connected? We already know that it is not simply connected (see Subsection 7.1). Remark that since $h_{\mathrm{top}}(f_{a,b}) = \log 2$ for any $(a, b) \in \mathbb{C} \times \mathbb{C}^{\times}$ by Theorem 2.2, the complex maximal entropy locus $\mathcal{M}_{\mathbb{C}}$ is the entire parameter space $\mathbb{C} \times \mathbb{C}^{\times}$.

8.2. **Ground states.** One of the key steps in the proof of Theorem 8.2 was to show that the boundaries of the first tangency locus $\partial\mathcal{H}^{\pm}_{\mathbb{R}}$ is surrounded by "tin cans" in the complexified parameter space (see Subsection 5.2 in [AI]). This condition has been verified by employing the interval Krawczyk method, an interval arithmetic version of Newton's root-finding algorithm. By modifying this argument together with the Schwarz Lemma in the parameter space we obtain the following estimate on the derivative of the function a_{tgc}.

Theorem 8.4 (Arai–Ishii–Takahasi [AIT])**.** *We have*

$$\frac{9}{8} < \lim_{b \to +0} \frac{da_{\mathrm{tgc}}}{db}(b) < \frac{23}{8}.$$

Theorem 8.4 is applied to investigate ergodic properties of the real Hénon maps $f_{a,b}$ at the first bifurcation parameters $(a, b) \in \partial\mathcal{H}^{+}_{\mathbb{R}}$. Among others, we are interested in a variational characterization of equilibrium measures "at temperature zero". To state it, denote by $M(f)$ the space of f-invariant Borel probability measures of a Hénon map f. An invariant measure $\mu \in M(f)$ is called a $(+)$-*ground state* if there exists an increasing sequence $t_n \in \mathbb{R}$ with $t_n \to +\infty$ as $n \to \infty$ so that μ is obtained as the weak limit of equilibrium measures for the potential function $-t_n \log \|D_p f|E^u_p\|$, where E^u_p is the unstable direction of $D_p f$ at $p \in \mathbb{R}^2$. Let

$$\Lambda^u_\mu(f) \equiv \int \log \|D_z f|E^u_p\| d\mu(p),$$

be the unstable Lyapunov exponent of f with respect to $\mu \in M(f)$ and let

$$\Lambda^u(a, b) \equiv \inf_{\nu \in M(f_{a,b})} \Lambda^u_\nu(f_{a,b}).$$

An invariant measure $\mu \in M(f)$ is called *Lyapunov minimizing* if it attains the infimum above. An invariant measure $\mu \in M(f)$ is called *entropy maximizing among the Lyapunov minimizing measures* if it attains the supremum of the metric entropy $h_\nu(f)$ over all Lyapunov minimizing measures ν (see [Ta] for more detail).

Let U_δ be the δ-neighborhood of the Chebyshev point $(a, b) = (2, 0)$ in the parameter space of the real Hénon family $f_{a,b}$. One can see that Theorem 8.4 yields a non-degeneracy condition in Theorem A (a) of [Ta] for the Hénon maps $f_{a,b}$ with $(a, b) \in \partial\mathcal{H}^{+}_{\mathbb{R}} \cap U_\delta$. As a consequence, we have the following variational characterization of the $(+)$-ground states.

Corollary 8.5 (Arai–Ishii–Takahasi [AIT])**.** *There exists $\delta > 0$ so that any $(+)$-ground state of any Hénon map $f_{a,b}$ with $(a, b) \in \partial\mathcal{H}^{+}_{\mathbb{R}} \cap U_\delta$ is Lyapunov minimizing, and entropy maximizing among the Lyapunov minimizing measures.*

Corollary 8.5 indicates that a local geometric property of a *complex* parameter locus yields ergodic property of *real* Hénon maps.

Acknowledgement. The author thanks Laurent Bartholdi, Eric Bedford, Romain Dujardin, John Hubbard, Hiroyuki Inou, Sarah Koch, Mitsuhiro Shishikura, John Smillie and Shigehiro Ushiki for their comments on the subjects of the manuscript. He is also grateful to the anonymous referee for his/her careful reading of the manuscript and detailed comments. This research is partially supported by JSPS KAKENHI Grant Numbers 25287020 and 25610020.

References

[AAIIKT] K. Anjyo, Z. Arai, H. Inou, Y. Ishii, S. Kaji, K. Tateiri, *Watch_H: a 4D visualization project.*

[A] Z. Arai, *On loops in the hyperbolic locus of the complex Hénon map and their monodromies.* Physica D **334** (2016), 133–140.

[AI] Z. Arai, Y. Ishii, *On parameter loci of the Hénon family.* Preprint (2015). `arXiv:1501.01368`

[AIT] Z. Arai, Y. Ishii, H. Takahasi, *Boundary of the horseshoe locus for the Hénon family.* In preparation.

[As] J. Ashley, *Marker automorphisms of the one-sided shift.* Ergodic Theory Dyn. Syst. **10** (1990), 247–262.

[B1] E. Bedford, *Iteration of polynomial automorphisms of* $\mathbf{C}^2$. Proceedings of the International Congress of Mathematicians, Vol. I, II (Kyoto, 1990), 847–858, Math. Soc. Japan, Tokyo, 1991.

[B2] E. Bedford, *Dynamics of rational surface automorphisms.* Holomorphic dynamical systems, 57–104, Lecture Notes in Math., 1998, Springer, Berlin, 2010.

[B3] E. Brdford, *Dynamics of polynomial diffeomorphisms in* $\mathbb{C}^2$*: foliations and laminations.* ICCM Not. **3** (2015), no. 1, 58–63.

[BDN] L. Bartholdi, D. Dudko, V. Nekrashevych, *Iterated monodromy groups of quadratic polynomials II.* Manuscript (2015).

[BGN] L. Bartholdi, R. I. Grigorchuk, V. Nekrashevych, *From fractal groups to fractal sets.* In Peter Grabner and Wolfgang Woess, editors, Fractals in Graz 2001, 25–118, Trends Math., Birkhäuser (2003).

[BN] L. Bartholdi, V. Nekrashevych, *Thurston equivalence of topological polynomials.* Acta Math. **197** (2006), no. 1, 1–51.

[BK] E. Bedford, K. Kim, *No smooth Julia sets for polynomial diffeomorphisms of* $\mathbb{C}^2$ *with positive entropy.* Preprint (2015). `arXiv:1506.01456`

[BLS1] E. Bedford, M. Lyubich, J. Smillie, *Polynomial diffeomorphisms of* $\mathbf{C}^2$*: IV. The measure of maximal entropy and laminar currents.* Invent. Math. **112** (1993), no. 1, 77–125.

[BLS2] E. Bedford, M. Lyubich, J. Smillie, *Distribution of periodic points of polynomial diffeomorphisms of* $\mathbf{C}^2$. Invent. Math. **114** (1993), no. 2, 277–288.

[BS$_{\mathbb{C}}$1] E. Bedford, J. Smillie, *Polynomial diffeomorphisms of* $\mathbf{C}^2$*: currents, equilibrium measure and hyperbolicity.* Invent. Math. **103** (1991), no. 1, 69–99.

[BS$_{\mathbb{C}}$2] E. Bedford, J. Smillie, *Polynomial diffeomorphisms of* $\mathbf{C}^2$*. II. Stable manifolds and recurrence.* J. Amer. Math. Soc. **4** (1991), no. 4, 657–679.

[BS$_{\mathbb{C}}$3] E. Bedford, J. Smillie, *Polynomial diffeomorphisms of* $\mathbf{C}^2$*. III. Ergodicity, exponents and entropy of the equilibrium measure.* Math. Ann. **294** (1992), 395–420.

[BS$_{\mathbb{C}}$5] E. Bedford, J. Smillie, *Polynomial diffeomorphisms of* $\mathbf{C}^2$*. V. Critical points and Lyapunov exponents.* J. Geom. Anal. **8** (1998), no. 3, 349–383.

[BS$_{\mathbb{C}}$6] E. Bedford, J. Smillie, *Polynomial diffeomorphisms of* $\mathbf{C}^2$*. VI. Connectivity of* J. Ann. of Math. (2) **148** (1998), no. 2, 695–735.

[BS$_{\mathbb{C}}$7] E. Bedford, J. Smillie, *Polynomial diffeomorphisms of* $\mathbf{C}^2$*. VII. Hyperbolicity and external rays.* Ann. Sci. École Norm. Sup. (4) **32** (1999), no. 4, 455–497.

[BS$_{\mathbb{C}}$8] E. Bedford, J. Smillie, *Polynomial diffeomorphisms of* $\mathbf{C}^2$*. VIII. Quasi-expansion.* Amer. J. Math. **124** (2002), no. 2, 221–271.

[BS$_{\mathbb{CR}}$] E. Bedford, J. Smillie, *The Hénon family: the complex horseshoe locus and real parameter space.* Complex dynamics, 21–36, Contemp. Math., 396, Amer. Math. Soc., Providence, RI, 2006.

[BS$_{\mathbb{R}}$1] E. Bedford, J. Smillie, *Real polynomial diffeomorphisms with maximal entropy: Tangencies.* Ann. of Math. (2) **160** (2004), no. 1, 1–26.

[BS$_{\mathbb{R}}$2] E. Bedford, J. Smillie, *Real polynomial diffeomorphisms with maximal entropy. II. Small Jacobian.* Ergodic Theory Dynam. Systems **26** (2006), no. 5, 1259–1283.

[BS$_{\mathbb{R}}$3] E. Bedford, J. Smillie, *A symbolic characterization of the horseshoe locus in the Hénon family.* To appear in Ergodic Theory Dynam. Systems.

[BSU] E. Bedford, J. Smillie, T. Ueda, *Parabolic bifurcations in complex dimension* 2. Preprint (2012). `arXiv:1208.2577`

[BW1] O. Biham, W. Wenzel, *Characterization of unstable periodic orbits in chaotic attractors and repellers.* Phys. Rev. Lett. **63** (1989), no. 8, 819–822.

[BW2] O. Biham, W. Wenzel, *Unstable periodic orbits and the symbolic dynamics of the complex Hénon map.* Phys. Rev. A (3) **42** (1990), no. 8, 4639–4646.

[BDK] P. Blanchard, R. L. Devaney, L. Keen, *The dynamics of complex polynomials and automorphisms of the shift.* Invent. Math. **104** (1991), no. 3, 545–580.

[CC] A. Candel, L. Conlon, *Foliations I.* Graduate Studies in Mathematics, 23. American Mathematical Society, Providence, RI, 2000. xiv+402 pp.

[CLM] A. de Carvalho, M. Lyubich, M. Martens, *Renormalization in the Hénon family, I: Universality but non-rigidity.* J. Stat. Phys. **121** (2005), no. 5-6, 611–669.

[DN] R. Devaney, Z. Nitecki, *Shift automorphisms in the Hénon mapping.* Comm. Math. Phys. **67** (1979), no. 2, 137–146.

[D] A. Douady, *Descriptions of compact sets in* $\mathbf{C}$. Topological methods in modern mathematics (Stony Brook, NY, 1991), 429–465, Publish or Perish, Houston, TX, 1993.

[DH] A. Douady, J. H. Hubbard, *Étude dynamique des polynômes complexes. Partie I.* Publications Mathématiques d'Orsay, 84-2. Université de Paris-Sud, Département de Mathématiques, Orsay, 1984. 75 pp. *Partie II.* With the collaboration of P. Lavaurs, Tan Lei and P. Sentenac. Publications Mathématiques d'Orsay, 85-4. Université de Paris-Sud, Département de Mathématiques, Orsay, 1985. v+154 pp.

[DP] R. DeMarco, K. Pilgrim, *Polynomial basins of infinity.* Geom. Funct. Anal. **21** (2011), no. 4, 920–950.

[DL] R. Dujardin, M. Lyubich, *Stability and bifurcations for dissipative polynomial automorphisms of* $\mathbb{C}^2$. Invent. Math. **200** (2015), no. 2, 439–511.

[EM] H. El Hamouly, C. Mira, *Lien entre les propriétés d'un endomorphisme de dimension un et celles d'un difféomorphisme de dimension deux.* C. R. Acad. Sci. Paris, Sér. I Math. **293** (1981), no. 10, 525–528.

[FS] J. E. Fornæss, N. Sibony, *Complex Hénon mappings in* $\mathbf{C}^2$ *and Fatou–Bieberbach domains.* Duke Math. J. **65** (1992), no. 2, 345–380.

[FA] *FractalAsm*, available at `http://www.math.cornell.edu/~dynamics/Henon/SD4.html`

[F] D. Fried, *Finitely presented dynamical systems.* Ergodic Theory Dynam. Systems **7** (1987), no. 4, 489–507.

[FM] S. Friedland, J. Milnor, *Dynamical properties of plane polynomial automorphisms.* Ergodic Theory Dynam. Systems **9** (1989), no. 1, 67–99.

[GKM] P. Grassberger, H. Kantz, and U. Moenig, *On the symbolic dynamics of the Hénon map.* J. Phys A, **22** (1989), 5217–5230.

[GST] J.-M. Gambaudo, S. van Strien, C. Tresser, *Hénon-like maps with strange attractors: there exist* C^∞ *Kupka-Smale diffeomorphisms on* S^2 *with neither sinks nor sources.* Nonlinearity **2** (1989), no. 2, 287–304.

[GT] J.-M. Gambaudo, C. Tresser, *How horseshoes are created.* Instabilities and nonequilibrium structures, III (Valparaíso, 1989), 13–25, Math. Appl., 64, Kluwer Acad. Publ., Dordrecht, 1991.

[Hé] M. Hénon, *A two-dimensional mapping with a strange attractor.* Comm. Math. Phys. **50** (1976), no. 1, 69–77.

[Hu] J. H. Hubbard, *The Hénon mapping in the complex domain.* Chaotic dynamics and fractals (Atlanta, Ga., 1985), 101–111, Notes Rep. Math. Sci. Engrg., 2, Academic Press, Orlando, FL, 1986.

[HO1] J. H. Hubbard, R. W. Oberste-Vorth, *Hénon mappings in the complex domain. I. The global topology of dynamical space.* Inst. Hautes Études Sci. Publ. Math. **79** (1994), 5–46.

[HO2] J. H. Hubbard, R. W. Oberste-Vorth, *Hénon mappings in the complex domain. II. Projective and inductive limits of polynomials.* Real and complex dynamical systems (Hillerød, 1993), 89–132, NATO Adv. Sci. Inst. Ser. C Math. Phys. Sci., 464, Kluwer Acad. Publ., Dordrecht, 1995.

[I1] Y. Ishii, *Hyperbolic polynomial diffeomorphisms of* $\mathbb{C}^2$. *I: A non-planar map.* Adv. Math. **218** (2008), no. 2, 417–464.

[I2] Y. Ishii, *Hyperbolic polynomial diffeomorphisms of* $\mathbb{C}^2$. *II: Hubbard trees.* Adv. Math. **220** (2009), no. 4, 985–1022.

[I2'] Y. Ishii, *Corrigendum to* [I2]. Adv. Math. **226** (2011), no. 4, 3850–3855.

[I3] Y. Ishii, *Hyperbolic polynomial diffeomorphisms of* $\mathbb{C}^2$. *III: Iterated monodromy groups.* Adv. Math. **255** (2014), 242–304.

[I4] Y. Ishii, MathSciNet review article for [Ko1].

[IS1] Y. Ishii, J. Smillie, *Homotopy shadowing.* Amer. J. Math. **132** (2010), no. 4, 987–1029.

[IS2] Y. Ishii, J. Smillie, *The homotopy kernel.* In preparation.

[J] H. W. E. Jung, *Über ganze birationale transformationen der Ebene.* J. Reine Angew. Math. **184** (1942), 161–174.

[KKY] I. Kan, H. Koçak, J. Yorke, *Antimonotonicity: Concurrent creation and annihilation of periodic orbits.* Ann. of Math. **136** (1992), no. 4, 219–252.

[Ka] J. Kahn, *A priori bounds for some infinitely renormalizable quadratics: I. Bounded primitive combinatorics.* Preprint (2006). `arXiv:math/0609045`

[Ko1] S. Koch, *SaddleDrop: a tool for studying dynamics in* $\mathbb{C}^2$. Teichmüller theory and moduli problem, 465–479, Ramanujan Math. Soc. Lect. Notes Ser., 10, Ramanujan Math. Soc., Mysore, 2010.

[Ko2] S. Koch, Private communications (2012).

[LS] E. Lau, D. Schleicher, *Internal addresses in the Mandelbrot set and irreducibility of polynomials.* Preprint (1994). `arXiv:math/9411238`

[L] C. Lipa, *Monodromy and Hénon mappings.* Ph.D dissertation, Cornell University (2009).

[LP] M. Lyubich, H. Peters, *Classification of invariant Fatou components for dissipative Hénon maps.* Geom. Funct. Anal. **24** (2014), no. 3, 887–915.

[M1] J. Milnor, *Nonexpansive Hénon maps.* Adv. Math. **69** (1988), no. 1, 109–114.

[M2] J. Milnor, *Dynamics in one complex variable.* Third edition. Annals of Mathematics Studies, 160. Princeton University Press, Princeton, NJ, 2006. viii+304 pp.

[M3] J. Milnor, *Periodic orbits, externals rays and the Mandelbrot set: an expository account.* Géométrie complexe et systèmes dynamiques (Orsay, 1995). Astérisque **261** (2000), xiii, 277–333.

[MT] J. Milnor, W. Thurston, *On iterated maps of the interval.* Dynamical systems (College Park, MD, 1986–87), 465–563, Lecture Notes in Math., 1342, Springer, Berlin, 1988. See also a preprint version (1977).

[MTDS] J. Milnor, C. Tresser, *On entropy and monotonicity for real cubic maps.* With an appendix by Adrien Douady and Pierrette Sentenac. Comm. Math. Phys. **209** (2000), no. 1, 123–178.

[MNTU] S. Morosawa, Y. Nishimura, M. Taniguchi, T. Ueda, *Holomorphic dynamics.* Cambridge Studies in Advanced Mathematics, 66. Cambridge University Press, Cambridge, 2000. xii+338 pp.

[Mu] P. Mummert, *Holomorphic shadowing for Hénon maps.* Nonlinearity **21** (2008), no. 12, 2887–2898.

[N] M. Nagata, *On automorphism group of* $k[x, y]$. Department of Mathematics, Kyoto University, Lectures in Mathematics, No. 5. Kinokuniya Book Store Co., Ltd., Tokyo, 1972. v+53 pp.

[Ne1] V. Nekrashevych, *Self-similar groups.* Mathematical Surveys and Monographs, 117. American Mathematical Society, Providence, 2005. xii+231 pp.

[Ne2] V. Nekrashevych, *Self-similar inverse semigroups and Smale spaces.* Internat. J. Algebra Comput. **16** (2006), 849–874.

[Ob] R. W. Oberste-Vorth, *Complex horseshoes.* Ph.D dissertation, Cornell University (1987).

[Ol] R. Oliva, *On the combinatorics of external rays in the dynamics of the complex Hénon map.* Ph.D dissertation, Cornell University (1998), available at `http://www.math.cornell.edu/~dynamics/`

[P] F. Przytycki, *Hausdorff dimension of harmonic measure on the boundary of an attractive basin for a holomorphic map.* Invent. Math. **80** (1985), 161–179.

[SD] *SaddleDrop*, available at `http://www.math.cornell.edu/~dynamics/SD//index.html`

[SU] I. P. Shestakov, U. U. Umirbaev, *The tame and the wild automorphisms of polynomial rings in three variables.* J. Amer. Math. Soc. **17** (2004), no. 1, 197–227.

[S1] J. Smillie, *The entropy of polynomial diffeomorphisms of* $\mathbf{C}^2$. Ergodic Theory Dynam. Systems **10** (1990), no. 4, 823–827.

[S2] J. Smillie, *Dynamics in two complex dimensions.* Proceedings of the International Congress of Mathematicians, Vol. III (Beijing, 2002), 373–382, Higher Ed. Press, Beijing, 2002.

[St] B. Stensønes *Fatou-Bieberbach domains with* C^∞*-smooth boundary.* Ann. Math. (2) **145** (1997), 365–377.

[SM] D. Sterling, J. D. Meiss, *Computing periodic orbits using the anti-integrable limit.* Phys. Lett. A **241** (1998), no. 1-2, 46–52.

[Ta] H. Takahasi, *Equilibrium measures at temperature zero for Hénon-like maps at the first bifurcation.* SIAM J. Appl. Dyn. Syst. **15** (2016), 106–124.

[T] W. P. Thurston, *On the combinatorics of iterated rational maps.* Edited by D. Schleicher and N. Selinger and with an appendix by Schleicher. Complex dynamics, 3–137, A. K. Peters, Wellesley, MA (2009).

[U1] S. Ushiki, `http://www.math.h.kyoto-u.ac.jp/~ushiki/`

[U2] S. Ushiki, *Phoenix*, IEEE Transactions on Circuits and Systems, Vol. 35, No. 7, July 1988, 788–789.

[Y] K. Yoneyama, *Theory of continuous set of points (not finished).* Tôhoku Math. J. **12** (1917), 43–158.

Department of Mathematics, Kyushu University, Motooka, Fukuoka 819–0395, Japan. Email: `yutaka@math.kyushu-u.ac.jp`