Mixed Trace Gas Sensing for Environmental Applications

Sulochana, K.
Department of Engineering Design, Indian Institute of Technology Madras

Eichmann, S. C.
Lehrstuhl für Technische Thermodynamik, Friedrich-Alexander-Universität Erlangen

Vasa, N. J.
Department of Engineering Design, Indian Institute of Technology Madras

Seeger, T.
Lehrstuhl für Technische Thermodynamik, Universität Siegen

他

出版情報：Journal of Novel Carbon Resource Sciences. 7, pp.42-46, 2013-02. Kyushu University G-COE program "Novel Carbon Resource Sciences" secretariat
バージョン：
権利関係：

Kyushu University Global COE Program
Journal of Novel Carbon Resource Sciences, Vol. 7, pp. 42-46, Feb. 2013

Mixed Trace Gas Sensing for Environmental Applications

K. Sulochana[*1], S. C. Eichmann[*2], N. J. Vasa[*1], T. Seeger[*3], M. Kumaravel[*4]

[*1]Department of Engineering Design, Indian Institute of Technology Madras
[*2]Lehrstuhl für Technische Thermodynamik, Friedrich-Alexander-Universität Erlangen
[*3]Lehrstuhl für Technische Thermodynamik, Universität Siegen
[*4]Department of Electrical Engineering, Indian Institute of Technology Madras

(Received October 30, 2012; accepted December 4, 2012)

Mixed gas sensing based on superluminescent diode (SLED) with Fabry-Perot etalon and vibrational coherent anti-Stokes Raman spectroscopy (CARS) technique with single Nd^{3+}:YAG laser for mixed gases like C_2H_2 / CO_2 and CH_4 / CO_2 are compared for combustion applications. With a sample cell filled with gas mixtures, the SLED technique provides low cost, selective gas sensing for exhaust emission measurements whereas the CARS technique with Raman shifter, provides coherent output with simplified experimental set up compared to conventional CARS. The planar BOX-CARS arrangement, used for flame measurement reduces non-resonance information. The measurement of temperature along with concentration is to be studied to use this CARS technique for combustion applications.

1. Introduction

Automotive and industrial emissions are a major source of urban atmospheric pollution[1]. High levels of pollutants such as carbon monoxide, nitrogen oxides, hydrocarbons and particulates are emitted from motor vehicles and industries that can lead to health and environmental problems. Hence, detection of these pollutants, identification of their sources and surveillance of these pollutants in the atmosphere is therefore an important step in the reduction of total emissions and improvement of urban air quality.

Optical sensing techniques have proven to be an effective method for measuring gas concentrations in various environmental, industrial process, chemical and combustion applications[2]. Instead of gas specific sensors, a mixed gas sensor which has a potential to sense trace gas concentrations of specific gases in a mixture of gases is desirable. Though, there are well established gas sensing techniques, they have limitations in sensing multiple gases simultaneously in terms of sensitivity, broadband tunability, complexity in measurement and interference between the species of interest[3]. The estimation of a gas concentration in a mixture of gases has been difficult because of the overlap of the spectral bands of multiple gases in the same region. For sensing multiple gases simultaneously, a laser source which is tunable over a broad spectrum is necessary. Hence, tunable solid-state lasers, nonlinear frequency conversion sources, diode lasers and quantum cascade lasers[4-6] have been considered. However, they posses limitations, such as high cost and complex set up. In this work, two different optical techniques are considered for detection of multiple gases with relatively simple configuration. One approach is based on a broadband continuous-wave super- luminescent diode (SLED) combined with a Fabry-Perot etalon, where absorption spectroscopy technique is used. This approach allows a robust configuration as compared to a tunable diode-laser based system which involves narrowband spectral narrowing, vibration free environment.

The SLED (1535 nm) based absorption technique[7] suffers due to the cross-interference of the other gases in the same region of interest. This can be overcome by suitably selecting the absorption line, using a narrow band filter, such as a solid - etalon[8]. By introducing etalon along the path of transmission, it should be possible (i) to suppress cross-interference effect by allowing the transmission spectra of the species of interest and blocking the transmission spectra corresponding to the interfering species, (ii) to measure the concentration of the species of interest.

The other approach consists of a pulsed Nd^{3+}:YAG laser combined with a Raman shifter, where coherent anti-Stokes Raman scattering (CARS) technique is used. This approach will allow combustion monitoring and remote sensing of different trace gases without a tunable laser system.

The CARS technique is widely used for combustion applications to measure concentration and temperature simultaneously. The measurement of multiple species with conventional CARS technique uses multiple laser sources[9,10]. But, a single Nd^{3+}:YAG laser (532 nm) with Raman Shifter as an additional light source, is used here to study multiple gases. The CARS technique gives coherent output, which is suitable for remote applications also.

In our work, the SLED based absorption technique is used to investigate C_2H_2 and CO_2, and the CARS technique is used to investigate CH_4 and CO_2 and first results are presented.

2. Theoretical background

2.1 SLED based absorption spectroscopy technique

The transmission of light can be related to molecular species absorption by the Beer-Lambert law and is given by

$$I_t(\lambda) = I_o(\lambda)\exp[-\alpha(\lambda,P,T)L] \quad (1)$$

where $I_t(\lambda)$ is the transmitted intensity, $I_o(\lambda)$ is the incident intensity, $\alpha(\lambda,P,T)$ is the absorption coefficient at the working wavelength (in cm^{-1}) and L is the absorption path length (in cm). Considering only one absorbing species, the absorption coefficient is given by

$$\alpha(\lambda) = \sigma(\lambda)N \quad (2)$$

where $\sigma(\lambda)$ represents the effective absorption cross - section (in cm^2 per molecule) and N the molecular density (in molecule cm^{-3}). The absorption cross-section is computed by considering the absorption line shape represented by Voigt profile. In the case of C_2H_2 and CO_2, the line strength values for the 1500 nm band were estimated by considering the given experimental conditions and the database from HITRAN08[11].

The absorbance can be estimated as follows:

$$\alpha(\lambda)L = -\ln(I_t(\lambda)/I_o(\lambda)) \quad (3)$$

As the SLED has a broadband output spectrum, the effective cross section values for both were estimated by considering the resolution values of the spectrum analyzers that was employed during experiments.

2.2 CARS technique

The CARS electric field and intensity are calculated by

$$E(\omega_{as},l) = \frac{\omega_{as}}{2n_{as}c}\chi_{CARS}E^2(\omega_p)E^*(\omega_s)\frac{\exp(i\Delta k.l)-1}{\Delta k} \quad (4)$$

$$I_{as} = \frac{\omega_{as}^2}{n_p^2 n_s n_{as} c^4 \varepsilon_o^2} I_p^2 I_s |\chi_{CARS}|^2 l^2 \left[\frac{\sin\frac{\Delta kl}{2}}{\Delta kl/2}\right]^2 \quad (5)$$

where I_p is the intensity of pump beam, I_s is the intensity of stokes beam, l is the coherent length, n_p, n_s and n_{as} are the refractive indices of the respective waves, ω_{as} is the frequency of the CARS beam, Δk is the phase constant and χ_{CARS} is the susceptibility. The detailed theoretical analysis about CARS technique is explained elsewhere[9]. The concentration ratio (CR) between the CO_2 and CH_4 molecules is computed from the experimental CARS intensity measured, by the following equation[12].

$$CR = \sqrt{\int I_{CARCO_2} \Big/ \int I_{CARCH_4}} \quad (6)$$

3. Experimental setup

3.1 SLED based absorption spectroscopy technique

Fig.1 shows the schematic view of the actual experimental setup for C_2H_2 and CO_2 monitoring. A SLED (EXS1510-2111- EXALOS) whose emission wavelength centered at around 1500 nm having a maximum output power of 12 mW and 3-dB bandwidth of 60 nm was used. It was driven by using a driver circuit powered by a 5 V dc supply. Tuning to maximum power was done by varying the resistance with the help of a potentiometer in the driver circuit and was set at a typical current value of 0.57 A. The fiber coupled SLED output was collimated using a fiber collimating lens (F230FC-C, Thorlabs) with a focal length of 4.5 mm and numerical aperture of 0.55.

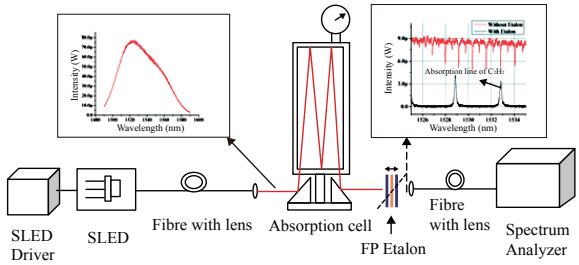

Fig. 1 Experimental setup for SLED based sensor system for monitoring C_2H_2 and CO_2.

The SLED output was passed through a multipass cell (Model 16-V, Infrared Analysis, Inc.) of 250 mm length, filled with different concentrations of C_2H_2 and CO_2 to be measured. Two plane transfer mirrors couple the infrared beam in and out of the cell. Two stainless steel valves mounted on the upper end of fiber coupling receiver unit (spectrum analyzer) of the cell, allowed smooth flow of gaseous samples through the cell. The pressure gauge and the pressure relief valve was used to control the pressure inside the cell. The cell has an adjustable optical path with path length steps of one meter up to a total path of 16 meters.

The radiation from the source was focused in the entrance aperture. The beam, which incident on the pair of gold-coated mirrors, undergone multiple reflections and thereby effectively increased the number of molecules it encounter. Although such reflections would decrease the output intensity of the beam, it increases the sensitivity of the apparatus and therefore a tradeoff between the two was required. The number of reflections in the study was kept at 8 accounting for a total path length of 2000 mm. A near-infrared scope (800 nm to 1500 nm) was used to examine the beam spots. The absorbed output from multi-pass cell was focused using a focusing optics with (f = 4.5 mm, F230FC-C, Thorlabs) and was analyzed using an optical spectrum analyzer (OSA) (Model : AQ6370B, YOKOGAWA) coupled through a single-mode fiber.

The data acquired through this spectrum analyser was then studied on the computer using Origin Graphics software to analyse the input spectrum. Experiments were performed by filling the multi-pass cell with differ-

ent concentrations of C_2H_2 and CO_2, that is, at different pressure values and the detection limit was estimated by considering 3dB noise spectrum. The experiment was repeated by introducing Etalon 517 GHz between the focusing lens and spectrum analyser and the detection limit was estimated for the measured values.

3.2 CARS technique

Generally three laser sources are used to generate the CARS signal. Commonly, a frequency doubled solid state laser in combination with two dye lasers with different wavelengths are used. In the proposed approach, the dye lasers are replaced by a Raman shifter, which generates the required probe beams. For a CO_2 CARS signal e. g. two pump beams with the wavelength of 532 nm and one Stokes beam with a wavelength of 574.5 nm are necessary. Fig. 2a shows the corresponding energy diagram for CO_2 resulting in a CARS signal at 495.4 nm. For CH_4 two pump beams with the wavelength of 532 nm and one Stokes beam with a wavelength of 629.6 nm can be used to achieve a CARS signal at 460.9 nm (see Fig. 2b). However, these two CARS signal will appear at different wavelengths and a simultaneous detection is difficult. By using the Stokes beam of the CO_2-CARS signal as second pump beam for the CH_4-CARS process, both CARS signals can be detected simultaneously (see Fig. 2a and 2c).

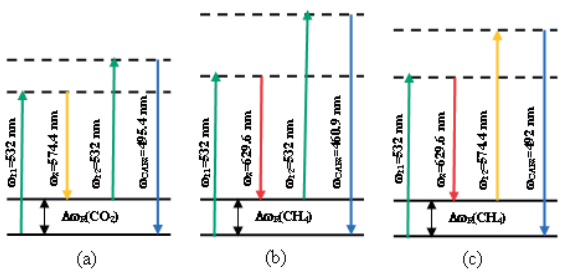

Fig. 2 Energy diagrams of different CARS processes.

Fig. 3 shows the experimental setup of collinear CARS technique used for detecting CH_4 and CO_2. A pulsed Nd^{3+}:YAG laser (10 Hz repetion rate, pulsed width 5-6 ns) at ω_p=532 nm wavelength in combination with a Raman shifter (1.25 m long), which was filled with the two species CH_4 and CO_2 at appropriate pressure values, was used to generate the corresponding Stokes output at $\omega_{s\text{-}CH_4}$ = 629.6 nm and $\omega_{s\text{-}CO_2}$ = 574.4 nm. Maximum Stokes intensity with less ratio fluctuations due to laser intensity was obtained at 300 kPa of CO_2 and 400 kPa of CH_4. The anti-Stokes signal from the Raman shifter was blocked by an appropriate filter. The pump beam and the Stokes beams from the Raman shifter were collinearly arranged and focused inside the gas cell. A flow controller was used to maintain different concentration ratios of CO_2 and CH_4 inside the gas cell. The three CARS signals resulted from the gas cell were at 495.4 nm ($2\omega_p$ - $\omega_{s\text{-}CO_2}$) due to CO_2, 460.9 nm ($2\omega_p - \omega_{s\text{-}CH_4}$) and 491.9 nm ($\omega_p + \omega_{s\text{-}CH_4} - \omega_{s\text{-}CO_2}$) due to CH_4. Out of these three signals, 495.4 nm and 491.9 nm were collected with only one camera using a single spectrometer without any modification of the detection system. The experiment was carried out by filling the gas cell with different concentration ratios of CH_4 and CO_2 at 1 atm pressure and the CARS signal intensity of both molecules were measured. The influence of change in laser intensity to the concentration ratio was also studied because in dependence of the laser pulse energy saturation effects like e.g. stark broadening may occur. The laser intensity was therefore varied from 80 mJ to 160 mJ. To reduce the non-resonance background in the collinear CARS setup, a planar BOX-CARS technique was implemented (Fig. 4).

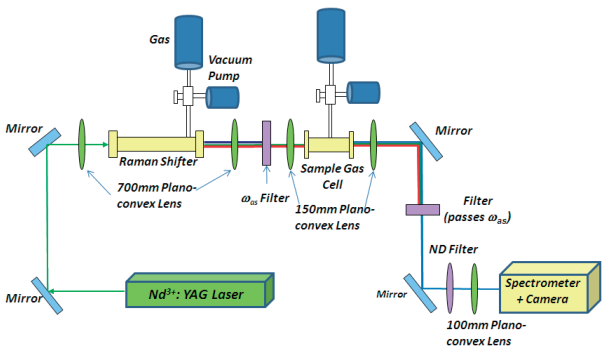

Fig. 3 Block diagram of collinear CARS setup.

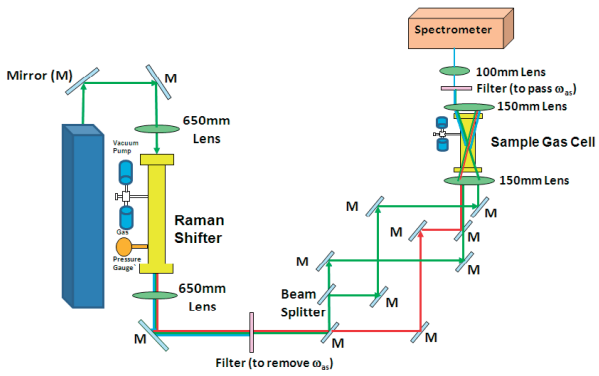

Fig. 4 Block diagram of Planar BOX-CARS set-up.

4. Results and discussion

4.1. SLED based absorption spectroscopy

Fig.5 displays the comparison of experimentally measured and computationally estimated transmission spectra from 1530 to 1540 nm wavelength region, for C_2H_2 at a pressure of 50 kPa. The transmission spectra was normalized in both the cases and plotted without introducing any offset. A good qualitative and quantitative agreement was observed for line positions and concentration measurements in the entire range.

Fig. 6 shows results of the transmission spectra of C_2H_2 and CO_2 gas molecules, using the SLED based sensing, without and with etalon. With this technique, a detection limit of around 1.8×10^{19} number/cm^3 (≈ 28 ppm) for C_2H_2 (Fig.7) and 3.88×10^{20} number/cm^3 (≈ 1080 ppm) for CO_2 was achieved However, for C_2H_2, the detection limit was further reduced to approximately 12 ppm when etalon with FSR 517 GHz was employed. In case of carbon dioxide the detection limit was enhanced to about 530 ppm using etalon with FSR 517 GHz. It shows that the SLED coupled with a solid Fabry-Perot etalon improves selectivity and sensitivity of the gas measurement, thereby making it a robust trace gas sensing system.

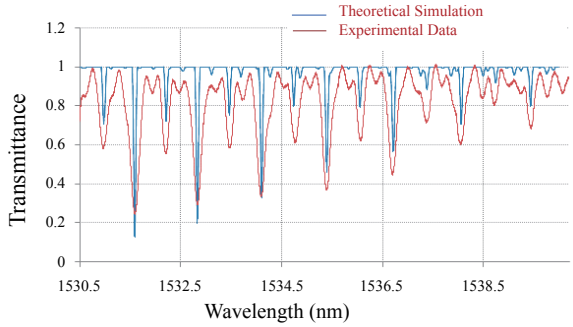

Fig. 5 Experimental and theoretical comparison plot of C_2H_2 with 0.2 nm resolution at 50 kPa pressure.

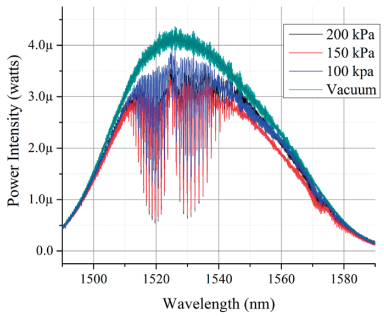

(a)

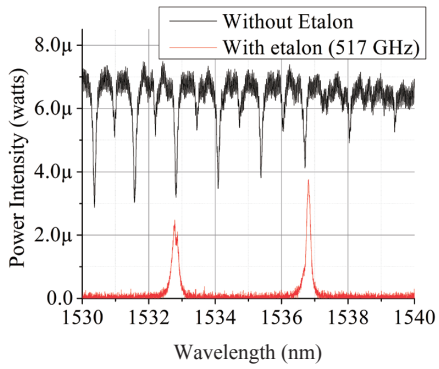

(b)

Fig. 6 (a) Absorption spectra of C_2H_2 and CO_2 at different pressures, (b) Absorption spectra of C_2H_2 with etalon (FSR 517 GHz).

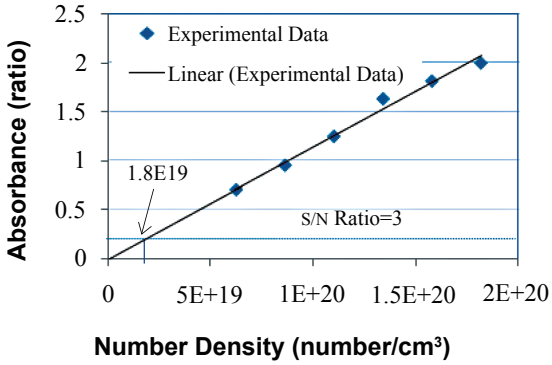

Fig. 7 Detection limit of C_2H_2 (@ 1540.11 nm) measured at SNR = 3.

4.2 CARS technique

Fig. 8 shows the spectrum of the CARS signal obtained from the gas cell filled with CO_2 and CH_4 using collinear CARS setup. The experiment was carried out to investigate the concentration ratio fluctuation due to laser intensity variation. At constant flow (12% of CO_2 and 88% of CH_4), the variation observed in the ratio of CO_2/CH_4 with respect to laser pump intensity fluctuation was negligible. Fig. 9 shows the linear relationship between the set concentration values of CO_2/CH_4 at atmospheric pressure to the experimental concentration ratio measured. Fig. 10 shows the result of flame measurement (diffusion flame of 90 mm height with 6 mm diameter) using a planar BOX-CARS technique. The probe volume observed with Planar BOX-CARS experiment was around 5 mm. As the separation of probe and pump beams were not 100%, a small collinear CARS signal was also observed along with BOX-CARS signal.

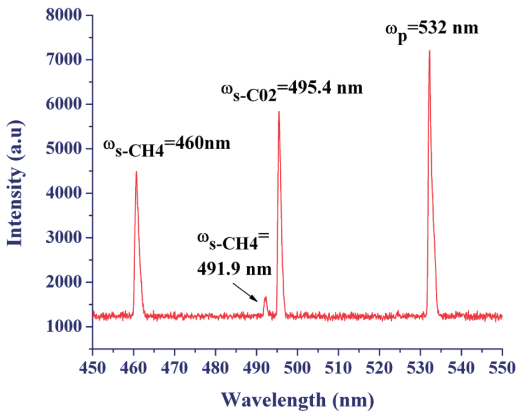

Fig. 8 The Spectrum of CARS from the gas cell filled with CO_2 and CH_4 (ω_p= pump beam ; ω_s-stokes beam).

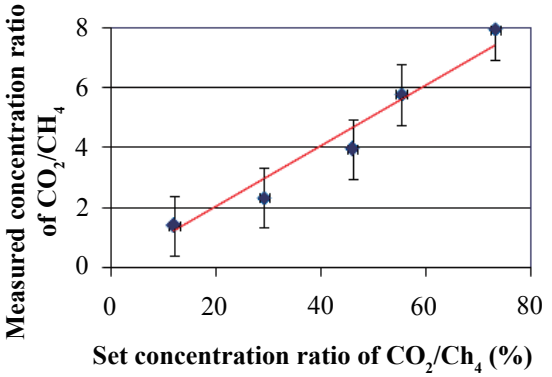

Fig. 9 Relationship between the measured intensity ratio and actual concentration ratio of CO_2/CH_4.

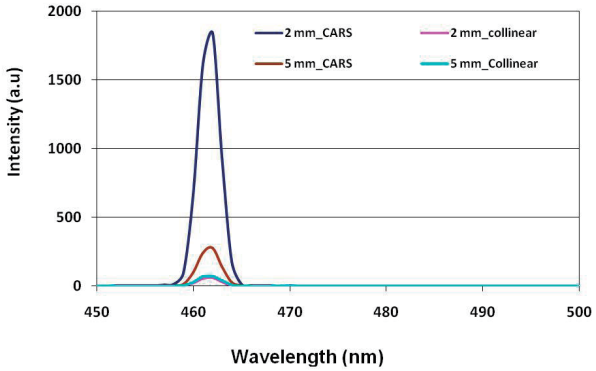

Fig. 10 CARS signal intensity of diffusion flame using planar BOX-CARS technique.

5. Conclusion

The SLED based absorption spectroscopy technique has been demonstrated for the detection of C_2H_2 and CO_2. With this technique, a detection limit of around 1.8×10^{19} number/cm^3 (≈ 28 ppm) for C_2H_2 and 3.88×10^{20} number/cm^3 (≈ 1080 ppm) for CO_2 were achieved. The detection limit was further reduced to approximately 12 ppm for C_2H_2, and 530 ppm for CO_2, using etalon with FSR 517 GHz. The technique is being studied for automotive exhaust gas, such as CO, NH_3, H_2O water-vapor measurements[13]. On the other hand, in a CARS setup, a single ND^{3+}:YAG laser was combined with a Raman shifter for a generation of CARS signals corresponding to the combustion relevant gases CH_4 and CO_2. It was observed that the concentration ratio between CO_2 and CH_4 at atmospheric pressure corresponding to the experimentally set value followed a linear relationship. The variation of the concentration ratio with respect to laser intensity was found to be negligible. To reduce the influence of the non-resonance background during flame measurement, a planar BOX-CARS technique was used.

The SLED based technique with etalon can be used for detection of multiple gas species, at few hundreds of ppm, however tuning of etalon (tilting) is required to detect multiple species simultaneously. The technique can be advantageously used for trace gas sensing at one point. On the other hand, the detection of different gases is done by simply changing the gases in the Raman Shifter, in the case of CARS. Remote detection is also possible, because of high power and pulsed laser output and due to the coherent nature of the process. For simultaneous measurement of a temperature along with the concentration in a combustion process, the CARS technique along with a high resolution spectrum analyzer can be considered to resolve the rotational lines[14-16].

Acknowledgements: The studies on collinear CARS were performed at the Lehrstuhl für Technische Thermodynamik, Friedrich- Alexander- Universität Erlangen - Nürnberg under STAR- DAAD Scholarship. The authors are grateful to S. Engel and Dr. A. Leipertz of Lehrstuhl für Technische Thermodynamik, Friedrich-Alexander- Universität Erlangen, Germany for their support during combustion studies.

References

1) H. Zhao and N. Ladommatos, *Prog. Energy Combust. Sci.*, **24**, 297 (1998).
2) I. Linnerud, P. Kaspersen, *T. Jæger, Appl. Phys. B*, **67**, 297 (1998).
3) F. K.Tittel1, D. Richter and A. Fried, *Appl. Phys.*, **89**, 445 (2003).
4) R. M. Mihalcea, D. S. Baer and R. K. Hanson, *27th Symp. (International) on Combust.*, 95 (1998).
5) M. E. Webber, Jian W. Scott, T. Sanders, D. S. Baer and R. K. Hanson, *Proce. of the Combust. Institute*, **28**, 407 (2000).
6) Y. Sych, R. Engelbrecht, B. Schmauss, D. Kozlov, T. Seeger, and A. Leipertz, *Optics Express*, **18**, 22762 (2010).
7) N. J. Vasa and M. Singaperumal, *Appl. Opt.*, **48**, G1 (2009).
8) H. Ding, J. Liang, J. Cui and X. Wu, *Sens. Actuators B*, **138**, 154 (2009).
9) A. C. Eckbreth, *Laser Diagnostics for Combustion Temperature and Species*, 2nd Ed., Gardon and Breach Science Publishers (1996).
10) S. Roy, J. R. Gord and A. K. Patnaik, *Progress Energy and Combust. Sci.*, **36**, 280 (2010).
11) L. S. Rothman, I. E. Gordon, A. Barbe and D. Chris Benner, *J. Quant Spectrosc. Radiat. Transf.*, **110**, 533 (2009).
12) F. Beyrau, T. Seeger, A. Malarski and A. Leipertz, *J. Raman Spectrosc.*, **34**, 946 (2003).
13) K. Divya, K. Sulochana, and N. J. Vasa, *IEEE J. Quantum Electronics*, **18**, 1540 (2012).
14) F. Beyrau., A. Bräuer, T. Seeger and A. Leipertz, *SAE Technical Paper*, 2004-01-1350 (2004).
15) F. Vestin, D. Sedarsky, R. Collin, M. Alden, M. Linne and P.-E.Bengtsson, *Combust. and Flame*, **154**, 143 (2008).
16) M. C. Weikl, Y. Cong, T. Seeger and A. Leipertz, *Appl. Opt.*, **48**, B43 (2009).