九州大学学術情報リポジトリ
Kyushu University Institutional Repository

Accumulation Rate of Digestible Materials and Formation Rate of Indigestible Materials in the Description of Relative Growth Rate of Forages

Shimojo, Masataka
Laboratory of Animal Feed Science, Faculty of Agriculture, Kyushu University

Bungo, Takashi
Laboratory of Animal Feed Science, Faculty of Agriculture, Kyushu University

Imura, Yoshimi
Laboratory of Animal Feed Science, Faculty of Agriculture, Kyushu University

Tobisa, Manabu
Laboratory of Animal Feed Science, Faculty of Agriculture, Kyushu University

他

https://doi.org/10.5109/24258

出版情報：九州大学大学院農学研究院紀要. 43 (1/2), pp.119-126, 1998-11. Kyushu University
バージョン：
権利関係：

KYUSHU UNIVERSITY

J. Fac. Agr., Kyushu Univ., **43** (1·2), 119–126 (1998)

Accumulation Rate of Digestible Materials and Formation Rate of Indigestible Materials in the Description of Relative Growth Rate of Forages

Masataka Shimojo, Takashi Bungo, Yoshimi Imura, Manabu Tobisa, Naoki Koga, Shao Tao, Muhammad Yunus, Yutaka Nakano*, Ichiro Goto, Mitsuhiro Furuse and Yasuhisa Masuda

Laboratory of Animal Feed Science, Faculty of Agriculture,
Kyushu University, Fukuoka 812–8581, Japan
(Received July 31, 1998 and accepted August 7, 1998)

This study was conducted to clarify the interrelationships between some analytic equations for the accumulation rate of digestible materials [ARD] and the interrelationships between those for the formation rate of indigestible materials [FRI], followed by the description of forage relative growth rate [RGR] using ARD and FRI. The following results were obtained: There were two equations to analyze ARD and one equation was a modified type of the other equation. Four equations were set up to analyze FRI and the prototype one was modified to change into the fourth equation which might describe the target materials of lignification more clearly than the other three equations. Forage RGR was described using ARD and FRI and this might give another interpretation of RGR based on the utilization characteristics of forages. It was suggested that there were some equations to analyze ARD and FRI describing RGR of forages.

INTRODUCTION

Relative growth rate [RGR] is recommended when the growth rate is compared between forages different in size (Hunt, 1990). It seems that RGR is usually analyzed mainly from the viewpoint of forage production, namely, using net assimilation rate [NAR] and leaf area ratio [LAR] with a further partition of LAR into specific leaf area [SLA] and leaf weight ratio [LWR].

We have suggested, in recent brief reports (Shimojo *et al.*, 1998e, f), an interpretation of RGR from the viewpoint of forage utilization, namely, using accumulation rate of digestible materials [ARD] and formation rate of indigestible materials [FRI]. It is also suggested that there are some equations to analyze FRI (Shimojo *et al.*, 1995, 1997a, b, 1998a, b, e, g). Likewise, ARD might be expected to be analyzed using some equations (Shimojo *et al.*, 1998c, d, f). This sort of investigation, which probably began with a pioneering work of Masuda (1985), is considered of importance to the evaluation of how forages grow as feed to ruminants. It seems that taking up ARD and FRI and the relationship with RGR in the same paper still remain to be investigated.

The present study was designed to clarify the interrelationships between some analytic equations for ARD and the interrelationships between those for FRI, followed by the description of RGR using ARD and FRI.

* Kyushu University Farm, Fukuoka 811–2307.

ANALYTIC EQUATIONS FOR ARD AND FRI

Analytic equations for ARD

An equation for ARD suggested by Shimojo *et al.* (1998c, f) is as follows:

$$\mathrm{ARD} = \frac{1}{W} \cdot \frac{dD}{dt}$$

$$= \frac{D + \frac{dW}{dt}}{W} \cdot \left(\frac{1}{D + \frac{dW}{dt}} \cdot \frac{dD}{dt} \right), \qquad (1)$$

where W=forage dry weight, D=dry weight of digestible materials in forage, dW/dt=new photosynthates (expressed in weight, not in rate), $D+dW/dt$=amount of source materials [S] for D accumulation, $(D+dW/dt)/W$=the ratio of S to W [S ratio], $\{1/(D+dW/dt)\}\cdot(dD/dt)$=accumulation rate of D per unit S [ARDS].

Another report by Shimojo *et al.* (1998d) suggests an expression of ARD using relative growth rate of D [RGRd]. Thus,

$$\mathrm{ARD} = \frac{D}{W} \cdot \left(\frac{1}{D} \cdot \frac{dD}{dt} \right). \qquad (2)$$

The comparison of these two equations suggests that equation (1) shows a form modified from that of equation (2) (Fig. 1), because the former one might give information on the D accumulation from both the digestible materials present in forage and the new photosynthates (Shimojo *et al.*, 1998c, f).

An example for this comparison is shown in Table 1 where there is an application of equations (1) and (2) to Rhodes grass (*Chloris gayana* Kunth) that was regrown at our experimental field with a dressing of a compound fertilizer ($N:P_2O_5:K_2O$=14:14:14%), after the first cut and discard, at a rate of 1.0 kg/a for each element.

Table 1. Characteristics of Rhodes grass and two methods for analyzing the accumulation of digestible materials with growth.

Regrowth (days)	25	41	74
Forage dry weight: W (g/m²)	223.85	398.98	593.32
Dry weight of digestible materials: D (g/m²)	155.98	208.43	266.83
ARD=(D ratio)·(RGR$_d$)			
ARD (g/g/day)	0.0108	0.0036	
D ratio (g/g)	0.5971	0.4828	
RGR$_d$ (g/g/day)	0.0181	0.0075	
ARD=(S ratio)·(ARDS)			
ARD (g/g/day)	0.0108	0.0036	
S ratio (g/g)	0.6332	0.4948	
ARDS (g/g/day)	0.0171	0.0073	

ARD=accumulation rate of D $[(1/W)\cdot(dD/dt)]$, D ratio=the ratio of D to W $[D/W]$, RGR$_d$=relative growth rate of D $[(1/D)\cdot(dD/dt)]$, S ratio=the ratio of source materials (D plus new photosynthates) to W $[(D+dW/dt)/W]$, ARDS=accumulation rate of D per unit S $[\{1/(D+dW/dt)\}\cdot(dD/dt)]$.

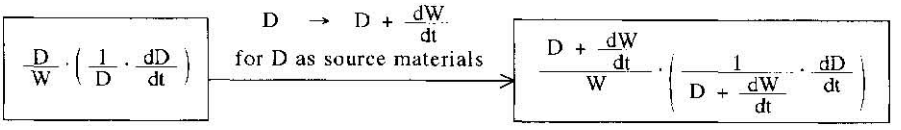

Fig. 1. Two equations for analyzing accumulation rate of digestible materials [ARD] with growth of forages (W=dry weight of forage, D=dry weight of digestible materials, dW/dt=new photosynthates (expressed in weight, not in rate)).

Analytic equations for FRI

An analytic equation for FRI suggested by Shimojo *et al.* (1995) is as follows:

$$\mathrm{FRI} = \frac{1}{W} \cdot \frac{dI}{dt}$$

$$= \frac{C}{W} \cdot \left(\frac{1}{C} \cdot \frac{dL}{dt} \right) \cdot \frac{dI}{dL}, \qquad (3)$$

where W=forage dry weight, I=dry weight of indigestible materials in forage, C=amount of cell wall constituents, L=amount of lignin, C/W=the ratio of C to W [CWC ratio], $(1/C)\cdot(dL/dt)$=formation rate of L per unit C [Specific FRL (associated with lignification rate of CWC)], dI/dL=formation of I per unit increase in L [FIL].

The second equation for FRI (Shimojo *et al.*, 1998a, e) is as follows:

$$\mathrm{FRI} = \frac{D + \frac{dW}{dt}}{W} \cdot \left(\frac{1}{D + \frac{dW}{dt}} \cdot \frac{dL}{dt} \right) \cdot \frac{dI}{dL}, \qquad (4)$$

where $(D+dW/dt)/W$=S ratio, $\{1/(D+dW/dt)\}\cdot(dL/dt)$=lignification rate of S [LRS], dI/dL=FIL.

Comparing equation (4) with equation (3) suggests that LRS in equation (4) refers more clearly to the target materials of lignification than Specific FRL in equation (3) does (Shimojo *et al.*, 1998a).

In the pioneering work of Masuda (1985) specific formation rate of indigestible materials per unit D [SFR] was given as follows:

$$\mathrm{SFR} = \frac{1}{D} \cdot \frac{dI}{dt}, \qquad (5)$$

where D=dry weight of digestible materials in forage, I=dry weight of indigestible materials in forage.

SFR was later incorporated into FRI in a report of Shimojo *et al.* (1998b, g) as follows:

$$\mathrm{FRI} = \frac{D}{W} \cdot \left(\frac{1}{D} \cdot \frac{dI}{dt} \right)$$

$$= \frac{D}{W} \cdot \left(\frac{1}{D} \cdot \frac{dL}{dt} \right) \cdot \frac{dI}{dL}, \qquad (6)$$

where D/W=the ratio of D to W [D ratio], $(1/D)\cdot(dI/dt)$=SFR, $(1/D)\cdot(dL/dt)$=lignification rate of D [LRD], dI/dL=FIL.
Equation (6) is also given by replacing C in equation (3) with D (Shimojo *et al.*, 1998g).

In addition to equations (3), (4) and (6), another equation for FRI might be expected to be constructed as follows:

$$\mathrm{FRI} = \frac{C + \frac{dW}{dt}}{W} \cdot \left(\frac{1}{C + \frac{dW}{dt}} \cdot \frac{dL}{dt} \right) \cdot \frac{dI}{dL}, \qquad (7)$$

where $C+dW/dt$=sum of CWC and new photosynthates [SCN], $(C+dW/dt)/W$=the ratio of SCN to W [SCN ratio], $\{1/(C+dW/dt)\}\cdot(dL/dt)$=lignification rate of SCN [LRSCN], dI/dL=FIL.
Equation (7) refers to the sum of CWC and new photosynthates as the target materials of lignification, which seems to be midway between equations (3) and (4).

Equations (3), (4), (6) and (7) construct a flowchart (Fig. 2) which shows how equation (3) is modified to change into equation (4) finally. As shown in Fig. 2, equation (3) is considered the prototype equation to analyze FRI where cell wall is the target of lignification (Shimojo *et al.*, 1995). As a portion of new photosynthates also becomes indigested (Balasko *et al.*, 1981; Masuda, 1985), the lignification of new photosynthates as well as cell wall is described in equation (7). In equation (6) the digestible materials present in forage are introduced in place of cell wall for the target of lignification and this equation also includes SFR which was given by Masuda (1985) to analyze the formation of indigestible materials from digestible materials. Adding the new photosynthates to the

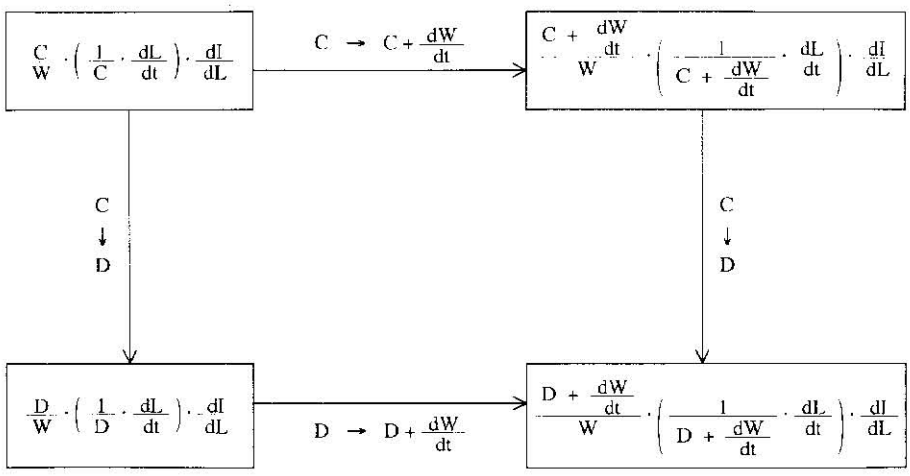

Fig. 2. Four equations for analyzing formation rate of indigestible materials [FRI] with growth of forages (W=dry weight of forage, I=dry weight of indigestible materials, C=amount of cell wall constituents, L=amount of lignin, D=dry weight of digestible materials, dW/dt=new photosynthates (expressed in weight, not in rate)).

Table 2. Characteristics of Rhodes grass and four methods for analyzing the formation of indigestible materials with growth.

Regrowth (days)	25	41	74
Forage dry weight: W (g/m^2)	223.85	398.98	593.32
Dry weight of indigestible materials: I (g/m^2)	67.87	190.55	326.49
Amount of cell wall constituents: C (g/m^2)	162.93	313.17	472.00
Amount of lignin: L (g/m^2)	8.81	29.36	49.45
Dry weight of digestible materials: D (g/m^2)	155.98	208.43	266.83
FRI=(CWC ratio)·(Specific FRL)·(FIL)			
FRI (g/g/day)	0.0253	0.0084	
CWC ratio (g/g)	0.7588	0.7906	
Specific FRL (g/g/day)	0.0056	0.0016	
FIL (g/g)	5.9698	6.7666	
FRI=(D ratio)·(LRD)·(FIL)			
FRI (g/g/day)	0.0253	0.0084	
D ratio (g/g)	0.5971	0.4828	
LRD (g/g/day)	0.0071	0.0026	
FIL (g/g)	5.9698	6.7666	
FRI=(SCN ratio)·(LRSCN)·(FIL)			
FRI (g/g/day)	0.0253	0.0084	
SCN ratio (g/g)	0.7949	0.8026	
LRSCN (g/g/day)	0.0053	0.0015	
FIL (g/g)	5.9698	6.7666	
FRI=(S ratio)·(LRS)·(FIL)			
FRI (g/g/day)	0.0253	0.0084	
S ratio (g/g)	0.6332	0.4948	
LRS (g/g/day)	0.0067	0.0025	
FIL (g/g)	5.9698	6.7666	

FRI=formation rate of I [$(1/W)\cdot(dI/dt)$], CWC ratio=the ratio of C to W [C/W], Specific FRL=formation rate of L per unit C [$(1/C)\cdot(dL/dt)$], FIL=formation of I per unit increase in L [dI/dL], D ratio=the ratio of D to W [D/W], LRD=lignification rate of D [$(1/D)\cdot(dL/dt)$], SCN ratio=the ratio of sum of C and new photosynthates to W [$(C+dW/dt)/W$], LRSCN=lignification rate of SCN [$\{1/(C+dW/dt)\}\cdot(dL/dt)$], S ratio=the ratio of source materials (D plus new photosynthates) to W [(D+ dW/dt)/W], LRS=lignification rate of S [$\{1/(D+dW/dt)\}\cdot(dL/dt)$].

digestible materials present in forage gives equation (4) that has recently been suggested by Shimojo *et al.* (1998a). This equation also comes from equation (7) by replacing cell wall with the digestible materials present in forage. It is suggested that equation (4) refers to the target materials of lignification more clearly, when compared with the other three equations.

There is an example (Table 2) for the comparison between equations (3), (4), (6) and (7) for FRI using Rhodes grass, the same grass as used in the analysis of ARD (Table 1).

DESCRIPTION OF RGR USING ARD AND FRI

Forage RGR is described using ARD (equation (1)) and FRI (equation (4)) as follows: An example is shown for equation (8) (Table 3) using the same Rhodes grass as used in the analysis of ARD (Table 1) and FRI (Table 2).

$$\begin{aligned}
\mathrm{RGR} &= \frac{1}{W}\cdot\frac{dW}{dt} \\
&= \frac{1}{W}\cdot\frac{d(D+I)}{dt} \\
&= \frac{1}{W}\cdot\frac{dD}{dt}+\frac{1}{W}\cdot\frac{dI}{dt} \\
&= \left\{\frac{D+\frac{dW}{dt}}{W}\cdot\left(\frac{1}{D+\frac{dW}{dt}}\cdot\frac{dD}{dt}\right)\right\}+\left\{\frac{D+\frac{dW}{dt}}{W}\cdot\left(\frac{1}{D+\frac{dW}{dt}}\cdot\frac{dL}{dt}\right)\cdot\frac{dI}{dL}\right\}. \qquad (8)
\end{aligned}$$

Table 3. Relative growth rate [RGR] expressed as the sum of accumulation rate of digestible materials [ARD] and formation rate of indigestible materials [FRI] in Rhodes grass.

Regrowth (days)	25	41	74
Forage dry weight: W (g/m²)	223.85	398.98	593.32
Dry weight of digestible materials: D (g/m²)	155.98	208.43	266.83
Dry weight of indigestible materials: I (g/m²)	67.87	190.55	326.49
Amount of lignin: L (g/m²)	8.81	29.36	49.45
RGR=ARD+FRI			
RGR (g/g/day)	0.0361	0.0120	
ARD (g/g/day)	0.0108	0.0036	
FRI (g/g/day)	0.0253	0.0084	
ARD=(S ratio)·(ARDS)			
ARD (g/g/day)	0.0108	0.0036	
S ratio (g/g)	0.6332	0.4948	
ARDS (g/g/day)	0.0171	0.0073	
FRI=(S ratio)·(LRS)·(FIL)			
FRI (g/g/day)	0.0253	0.0084	
S ratio (g/g)	0.6332	0.4948	
LRS (g/g/day)	0.0067	0.0025	
FIL (g/g)	5.9698	6.7666	

RGR=relative growth rate [$(1/W)\cdot(dW/dt)$], ARD=accumulation rate of D [$(1/W)\cdot(dD/dt)$], FRI=formation rate of I [$(1/W)\cdot(dI/dt)$], S ratio=the ratio of source materials (D plus new photosynthates) to W [$(D+dW/dt)/W$], ARDS=accumulation rate of D per unit S [$\{1/(D+dW/dt)\}\cdot(dD/dt)$], LRS=lignification rate of S [$\{1/(D+dW/dt)\}\cdot(dL/dt)$], FIL=formation of I per unit increase in L [dI/dL].

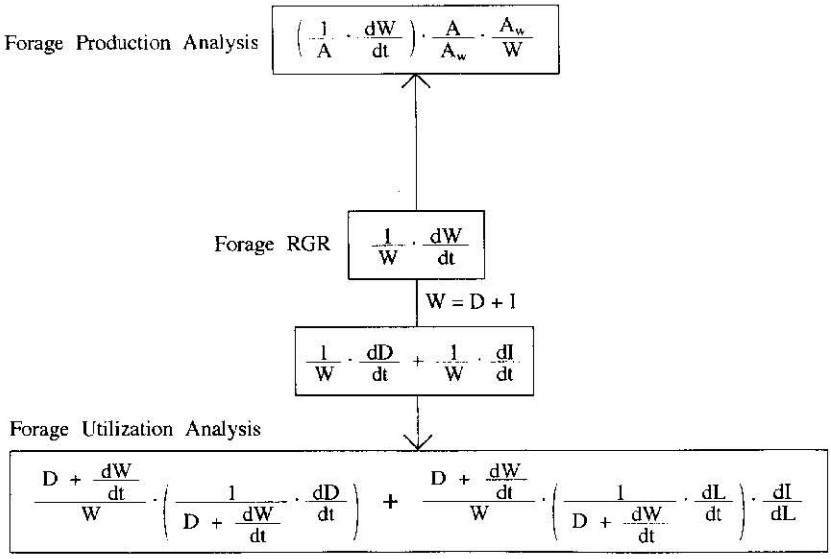

Fig. 3. Relative growth rate [RGR] related to the analysis of production and utilization of forages (W=forage dry weight, A=leaf area, A_w=leaf weight, I=dry weight of indigestible materials, L=amount of lignin, D=dry weight of digestible materials, dW/dt=new photosynthates (expressed in weight, not in rate)).

Therefore, equation (8) might give another interpretation of RGR which is based on the forage utilization characteristics, in addition to the well known description based on the forage production characteristics as shown in the following equation. Thus,

$$\mathrm{RGR}=\left(\frac{1}{A}\cdot\frac{dW}{dt}\right)\cdot\frac{A}{A_W}\cdot\frac{A_W}{W}, \qquad (9)$$

where W=forage dry weight, A=leaf area, A_w=leaf weight, $(1/A)\cdot(dW/dt)$=net assimilation rate [NAR], A/A_w=specific leaf area [SLA], A_w/W=leaf weight ratio [LWR].

Thus, RGR of forages is related to the utilization analysis as well as to the production analysis (Fig. 3).

Conclusions

It is suggested from this study that there are some equations to analyze ARD and FRI which describe RGR of forages.

ACKNOWLEDGEMENTS

The present study is based on our previous works on the analysis of forage production and utilization which were supported by Mr. Yasukatsu Yano who showed his skilled technical assistance.

REFERENCES

Balasko, J. A., D. P. Knievel and D. Smith 1981 Incorporation of carbon–14 into the indigestible fraction of timothy herbage. *Crop Sci.*, **21**: 766–769

Hunt, R. 1990 Relative growth rates. *In* "Basic Growth Analysis", Unwin Hyman Ltd., London, pp. 25–34

Masuda, Y. 1985 Analysis of dry matter digestibility of green panic as affected by the change in temperature. *Proc. XV Int. Grassl. Congr.*, 1009–1011

Shimojo, M., Y. Masuda, T. Bungo, T. Kawamura and I. Goto 1995 Analytical expression for formation of indigestible materials and increase in dry matter indigestibility with growth of some tropical grasses. *J. Fac. Agr., Kyushu Univ.*, **40**: 179–188

Shimojo, M., T. Bungo, Y. Imura, M. Tobisa, N. Koga, Y. Nakano, I. Goto and Y. Masuda 1997a An analysis of digestibility change with growth of forage. *In* "Present and future of rumen research", *Proc. First Joint Symp. Japan and Korea on Rumen Metab. Physiol.*, P–11

Shimojo, M., Y. Imura, M. Tobisa, N. Koga, T. Bungo, Y. Nakano, T. Nishihira, I. Goto and Y. Masuda 1997b Formation of indigestible materials and increase in dry matter indigestibility in the growth of two tropical forages. *J. Fac. Agr., Kyushu Univ.*, **42**: 95–99

Shimojo, M., Y. Imura, T. Bungo, M. Tobisa, N. Koga, S. Tao, M. Yunus, Z. Yin, Y. Nakano, I. Goto and Y. Masuda 1998a Formation of indigestible materials from digestible materials and photosynthates in the growth of Rhodes grass (*Chloris gayana* Kunth). *J. Fac. Agr., Kyushu Univ.*, **42**: 355–360

Shimojo, M., T. Bungo, Y. Imura, M. Tobisa, N. Koga, S. Tao, M. Yunus, Z. Yin, Y. Nakano, I. Goto and Y. Masuda 1998b Relationship between two different–type equations analyzing increase in dry matter indigestibility with growth of forages. *J. Fac. Agr., Kyushu Univ.*, **42**: 361–364

Shimojo, M., T. Bungo, M. Tobisa, Y. Imura, N. Koga, S. Tao, M. Yunus, Z. Yin, Y. Nakano, I. Goto and Y. Masuda 1998c Accumulation of digestible materials and decrease in dry matter digestibility in the growth of two tropical grasses. *J. Fac. Agr., Kyushu Univ.*, **42**: 365–372

Shimojo, M., T. Bungo, Y. Imura, M. Tobisa, N. Koga, S. Tao, M. Yunus, Z. Yin, Y. Nakano, I. Goto and Y. Masuda 1998d Two different–type equations analyzing decrease in dry matter digestibility with growth of forages. *J. Fac. Agr., Kyushu Univ.*, **42**: 373–376

Shimojo, M., T. Bungo, M. Tobisa, Y. Imura, N. Koga, S. Tao, M. Yunus, Y. Nakano, I. Goto, M. Furuse and Y. Masuda. 1998e Analyses of formation of indigestible materials and increase in dry matter indigestibility with growth of two tropical forages. *Proc.8th World Conf. Anim. Prod.*, Seoul, Korea,**Vol. II**: 508–509

Shimojo, M., T. Bungo, S. Tao, Y. Imura, M. Tobisa, N. Koga, M. Yunus, Y. Nakano, I. Goto, M. Furuse and Y. Masuda. 1998f Analyses of accumulation of digestible materials and decrease in dry matter digestibility with growth of Rhodes grass. *Proc.8th World Conf. Anim. Prod.*, Seoul, Korea, **Vol. II**: 516–517

Shimojo, M., T. Bungo, Y. Imura, M. Tobisa, N. Koga, S. Tao, M. Yunus, Y. Nakano, I. Goto, M. Furuse and Y. Masuda. 1998g Some aspects on the analysis of the formation of indigestible materials with growth of forages. *Proc. 8th World Conf. Anim. Prod.*, Seoul, Korea, **Vol. II**: 518–519