九州大学学術情報リポジトリ
Kyushu University Institutional Repository

Approach for the Simultaneous Flow Injection Determination of L-Tyrosine and L-Lysine based on the Enzyme Reactors

Matsumoto, Kiyoshi
Laboratory of Food Quality Control, Faculty of Agriculture, Kyushu University

Gao, Ling-Yuan
Laboratory of Food Analysis, Faculty of Agriculture, Kyushu University

Osajima, Yutaka
Laboratory of Food Analysis, Faculty of Agriculture, Kyushu University

https://doi.org/10.5109/24052

出版情報：九州大学大学院農学研究院紀要. 38 (3/4), pp.207-212, 1994-03. Kyushu University
バージョン：
権利関係：

J. Fac. Agr., Kyushu Univ., 38 (3・4), 207-212 (1994)

Approach for the Simultaneous Flow Injection Determination of L-Tyrosine and L-Lysine based on the Enzyme Reactors

Kiyoshi Matsumoto, Ling-Yuan Gao* and Yutaka Osajima*

Laboratory of Food Quality Control, Faculty of Agriculture,
Kyushu University 46-09, Fukuoka 812, Japan
*Laboratory of Food Analysis, Faculty of Agriculture,
Kyushu University 46-09, Fukuoka 812, Japan
(Received *December 21, 1993)*

The simultaneous determination of L-tyrosine and L-lysine, by enzyme-supported flow injection analysis (FIA) was developed using two enzyme reactors in parallel and a single oxygen electrode. L-Tyrosine and L-lysine were determined using the enzyme L-tyrosinase (EC 1.14.18.1) and L-lysine-α-oxidase (LysOD, EC 1.4.3.-), respectively. When sample solutions were simultaneously injected into the two reactors (the tyrosinase reactor and the LysOD reactor) with a controlled residence time, a "train" of two peaks corresponding to L-tyrosine and L-lysine were seen in the FIA-gram. The peak currents were linearly related to the L-tyrosine and L-lysine concentration in the range of 0.1-0.8 mM and 0.05-0.5 mM, respectively. The present system was applied to the determination of L-tyrosine and L-lysine in the synthetic mixture.

INTRODUCTION

Rapid analytical methods which combine an immobilized enzyme reactor with the flow injection analytical (FIA) method have been studied extensively (Yao, 1985). The application of this method to food analysis offers a powerful tool in the field of food chemistry. There is a demand for a fast method for the determination of amino acid in food samples. L-Amino acid oxidase from snake venom is unspecific, however, and therefore not suitable for the selective determination of each amino acid. Among amino acid relating enzymes, L-tyrosinase (EC 1.14.18.1) and L-lysine-α-oxidase (LysOD, EC 1.4.3.-) have relatively high specificities for L-tyrosine and L-lysine, respectively, and the use of those enzymes meets our demand. The determination of tyrosine by enzymatic flow injection method has been reported by Kiba et al. (1990), and Gao et al. (1992) and the determination of L-lysine by enzymatic method has been reported by Kusakabe et al. (1979), Romette et al. (1983), and Pohlmann et al. (1990). So far, the determination method developed has been focused for a single component. The development of a system for simultaneous determination of multicomponents is desired by the field of food chemistry. The few simultaneous determination systems reported are classified into three types from the viewpoint of the combination of the number of flow lines and detectors as follows, (1) single flow line - plural detectors (Karube et *al.,* 1984), (2) plural flow lines - single detector (Morishita et al., 1986; Masoom *et al.,* 1985), (3) plural flow lines -plural detectors (Matsumoto et al., 1988; 1990). The system using a single detector has an advantage of simplicity of the system, but the use of a single flow line has a disadvantage because the carrier solution used in the flow line is not always optimum for enzymes used. This disadvantage means the restriction of analytes which can make determination simultaneously.

Recently, we proposed a simultaneous determination system having two flow lines,

including enzyme reactors, in a parallel configuration and a single Clark oxygen electrode detector (Ukeda et *al.,* 1990; Yoshioka *et* al., 1992).

This article describes the simultaneous determination of L-tyrosine and L- lysine by using FIA, which includes a parallel configuration of enzyme reactors and a single Clark oxygen electrode.

MATERIALS AND METHODS

Reagents

L-Tyrosinase (EC 1.14.18.1; from mushrooms, 3130 U/mg solid) and controlled - pore glass (aminopropyl- CPG, pore size 700Å, particle size 80 - 120 mesh) were obtained from Sigma Chemical Co. L-Lysine-α -oxidase (EC 1.4.3. -; from *Trichoderma viride,* ***2.1*** U/mg powder) was obtained from Yamasa Shoyu Co. Ltd. Glutaraldehyde (25% aqueous solution), L-tyrosine and L- lysine were purchased from Nacalai Tesque Co. All other chemicals were of analytical reagent grade and were used without further purification.

Preparation of immobilized enzyme reactors

The method was similar to that described previously (Gao et ***al.,*** 1992). Controlled-pore glass was packed into two glass columns (10 cm X ***2 mm*** i.d.) by dry packing. Glutaraldehyde solutions (3%, V/V> in 0.05 M phosphate buffer (pH 7.0) were circulated through two columns at 0.2 ml/min for 1 h, and the two columns were washed with distilled water at 0.5 ml /min for 20 min at room temperature. L-Tyrosinase (12500 U) was loaded in one of the columns and LysOD (10 U) in the other by recycling the enzyme-phosphate buffer (0.05 M, pH 7.0) solution (4 ml) at 0.2 ml / min for 17 h at 4°C. Immobilized reactors were washed with 0.1 M phosphate buffer (pH 7.0). The reactors were stored in 0.1 M phosphate buffer (pH 7.0) at 5°C when not in use.

Flow system

A schematic diagram of the flow system is shown in Fig. 1. Teflon tube (1.0 mm i.d.) was used for all lines of the flow system. The sample solutions, diluted with 0.1 M phosphate buffer (pH 7.0), were pumped through the sample loop (L_1, 140 μl) of the tyrosine line, then reaching another sample loop (L_2, 140 μl) of the lysine line. The sample solutions were simultaneously injected into the each line with a 16 - way switching valve (Hitachi, K -1600) and transported to the enzyme reactors. After leaving the enzyme reactors, the samples entered a flow-through cell equipped with a Clark oxygen electrode (Yellow Springs Instrument, Model No. 5331). When the residence time of the sample solutions (between the injected point and flow- through cell) were controlled, a train of two peaks corresponding to L - tyrosine and L - lysine were seen in the FIA-gram. In the L-lysine line, the delay coil (80 cm) was set between the injected point and the LysOD reactor. The potential of the oxygen electrode was fixed at -0.8 V and the flow cell used was the same as in our previous paper (Ukeda ***et al.,*** 1989). Amperometric measurements were made with a polarograph P8 -CV (Yanagimoto Co., Ltd.) and peak heights were registered on a

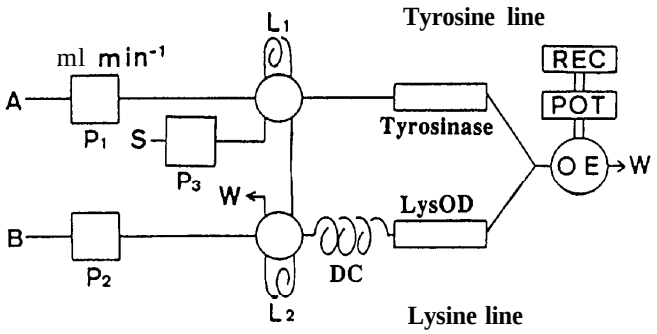

Fig. 1. Flow injection analytical system for simultaneous determination of L-tyrosine and L-lysine A, B : 0.1 M phosphate buffer (pH 7.0); P1, P2, P3: micro tube pump;Ll, L2 : sample loop; DC: delay coil (80cm × 0.5mm i. d.); OE : oxygen electrode; POT: potentiostat; REC: recorder; S: sample solution; W: waste.

recorder (Shimadzu, R-231). The determinations were all carried out at (20±1)°C.

RESULTS AND DISCUSSION

Optimum pH

Experiments were first done to establish the optimum pH of the carrier solution for the LysOD reactor. Phosphate buffer (0.1 M) at pH 6.0-8.5 was tested as the carrier

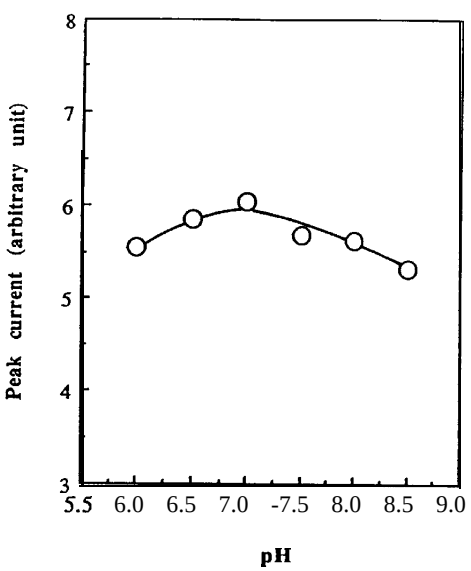

Fig. 2. Effect of pH on the activity of immobilized L-lysine-α-oxidase (0.5 mM L-lysine).

solution. The maximum activity of LysOD was found at pH 7.0 as shown in Fig. 2. In addition, the pH dependence of the tyrosinase reactor has been already reported (Gao et *al.*, 1992), that is, the maximum peak current was obtained in the pH range of 7.0 - 7.5. Thus, we have used 0.1 M phosphate buffer (pH 7.0) as the carrier solution.

Optimum flow rate

Control of flow rate is important for simultaneous determination of two components by a single detector. Figure 3 shows the effect of flow rate in the L-lysine

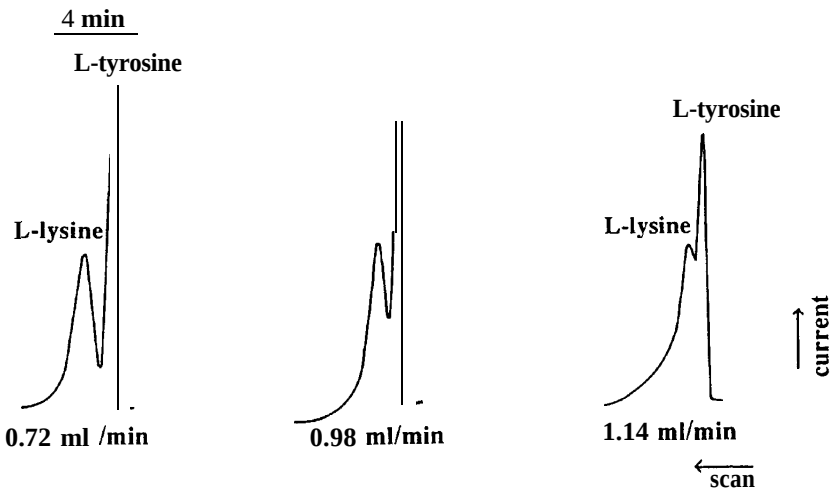

Fig. 3. Effect of flow rate in lysine line on response curves
The flow rate in the tyrosine line was fixed at 1.3 ml /min. L - tyrosine concentration: 0.4 mM; L-lysine concentration: 0.4 mM.

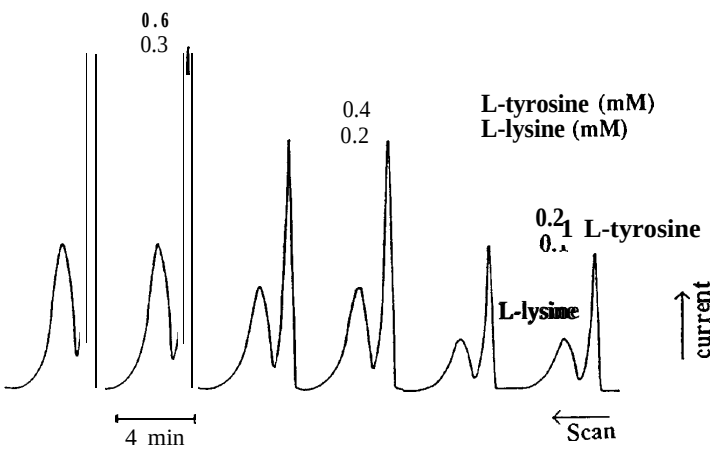

Fig. 4 FIA-gram of this analytical method for synthetic mixture of L-tyrosine and L-lysine.

line on the separation of the two peaks when the flow rate of the L-tyrosine line was fixed at 1.3 ml/min. The fixed flow rate of the L-tyrosine line was selected because response of L-tyrosine did not change at the flow rate range of 0.7 - 1.3 ml/min as reported previously (Gao et al., 199.2). The separation of two peaks was not completed at the flow rate of 1.14 ml/min or 0.98 ml/min. In contrast, the two peaks have separated nicely when the flow rate of 0.72 ml/min was achieved. Consequently, we have selected the flow rate of 0.72 ml/min as the optimum flow rate of the L-lysine line.

Calibration curve, typical response curve and reproducibility

Under the optimum conditions described above, the peak currents were linearly related to the L-tyrosine and L-lysine concentrations in the range of 0.1 - 0.8 mM and 0.05 - 0.5 mM, respectively. Figure 4 shows the typical response curves of L- tyrosine and L-lysine for the synthetic mixture. The relative standard deviations for five repeated injections were 2% and 1.6% for L-tyrosine (0.5 mM) and L-lysine (0.5 mM), respectively. The sampling frequency was 17 samples/h.

Interference and long-term stability

As described previously, no interference of L-lysine to L- tyrosinase was observed (Gao et *al.*, 1992). The interferences of L- tyrosine, L-phenylalanine, L- arginine and L-histidine to the L-lysine signal were relatively large. When the response of L- lysine (0.5 mM) was defined as 100%, the responses of L-tyrosine, L-phenylalanine, L-arginine and L-histidine were 10.5, 5.5, 4, 3.8%, at the same concentration, respectively. The response peak of the L-lysine line was corrected by the determination value of L-tyrosine when only L- lysine and L- tyrosine were included in the sample. The elimination method for the interferences of L-phenylalanine, L-arginine or L-histidine is now under investigation using an ~-amino acid oxidase immobilized column. The stability of the tyrosinase reactor was described previously (Gao et *al., 1992).* The operational stability of the immobilized LysOD reactor under the storage condition of 5 °C was relatively good. The response remained at the original value over 2 weeks and about 60% of the original value remained after 2 months at 0.5 mM L-lysine level.

REFERENCES

Gao, L-Y., K. Matsumoto and Y. Osajima 1992 Monitoring of tyrosine during proteolysis of oyster extract by flow injection system with immobilized enzyme reactor. ***Nippon Shokuhin Kogyo Gakkaishi, 39: 620-624***

Karube, I., H. Matsuoka, E. Watanabe and S. Suzuki 1984 Measurement of freshness with a multifunctional enzyme sensor using multienzyme membranes. ***Kobunshi Ronbunshu, 41: 233 248***

Kiba, N., M. Ogi and M. Furusawa 1989 Flow-injection determination of L- tyrosine in serum with an immobilized tyrosinase reactor and fluorescence detection. ***Anal. Chim.*** *Acta,* ***224: 133 -138***

Kusakabe, H., K. Kodama, A. Kuninaka, H. Yoshino and K. Soda 1979 Sensitive and simple methods for determination of L-lysine with L-lysine α -oxidase. *Agric. Biol.* ***Chem., 43:*** 1749 - 1752

Masoom, M. and A. Townshend 1985 Simultaneous determination of sucrose and glucose in

mixtures by flow injection analysis with immobilized enzymes. Anal. *Chim. Acta*, 171: 185-194

Matsumoto, K., H. Kamikado, H. Matsubara and Y. Osajima 1988 Simultaneous determination of glucose, fructose, and sucrose in mixtures by amperometric flow injection analysis with immobilized enzyme reactors. *Anal. Chem.*, **60**: 147-151

Matsumoto, K., H. Matusbara, M. Hamada, H. Ukeda and Y. Osajima 1990 Simultaneous determination of glucose, ethanol and lactate in alcoholic beverages and serum by amperometric flow injection analysis with immobilized enzyme reactors. *J.* Biotechnology, 14: 115-126

Morishita, F., Y. Nishikawa and T. Kojima 1986 Simultaneous determination of three species by flow injection analytical method using enzyme-immobilized open-tubular reactors. Anal. *Sci.*, 2: 411-415

Pohlmann, A., W. W. Stamm, H. Kusakabe, M-R., Kula 1990 Enzymatic determination of L-lysine by flow-injection techniques. *Anal. Chivn. Acta*, *235: 329-335*

Romette, J. L., J. S.Yang, H. Kusakabe and D. Thomas 1983 Enzyme electrode for specific determination of L-lysine. *Biotechnol. &* Bioeng., 25: 2557-2566

Ukeda, H., M. Matsubara, K. Matsumoto and Y. Osajima 1989 Determination of ethanol based on oxygen consumption with an enzyme sensor using vitamin K 3 as a mediator. *Bunseki Kagaku, 38:* T165-T169

Ukeda, H., Y. Nakada, K. Matsumoto and Y. Osajima 1990 Simultaneous determination of L-malate and ethanol in wine by a sensor based on oxygen consumption including parallel configuration of enzyme columns. *Bunseki Kagaku, 39: 723-727*

Yao, T. 1985 Flow injection analysis using immobilized enzymes. *J. Flow Injection Anal., 2:* 115-*132*

Yoshioka, S., H. Ukeda, K. Matsumoto and Y. Osajima 1992 Simultaneous flow injection analysis of L-lactate and L-malate in wine based on the use of enzyme reactors. *Electroanalysis, 4: 545 548*