Thermochemical Water-Splitting for Hydrogen Production by Antimony-Iodine Processes

Miura, Norio
Department of Materials Science and Technology, Interdisciplinary Graduate School of Engineering Sciences, Kyushu University

Yamazoe, Noboru
Department of Materials Science and Technology, Interdisciplinary Graduate School of Engineering Sciences, Kyushu University

Seiyama, Tetsuro
Department of Materials Science and Technology, Interdisciplinary Graduate School of Engineering Sciences, Kyushu University

https://doi.org/10.15017/17547

出版情報：九州大学大学院総合理工学報告. 4 (1), pp.1-13, 1982-06-30. 九州大学大学院総合理工学研究科
バージョン：
権利関係：

Thermochemical Water-Splitting for Hydrogen Production by Antimony-Iodine Processes

Norio MIURA*, Noboru YAMAZOE*
and Tetsuro SEIYAMA*

(原稿受理 昭和57年2月10日)

A new thermochemical water-splitting process named "Sb-I Process" was proposed on the basis of thermodynamic considerations and some preliminary experiments. The process consists of three reactions which eventually produce hydrogen from water via HI intermediate. Subsequent examinations, however, showed that this process embraced a difficulty in the separation of HI gas from the reaction system. To overcome this difficulty, the process was subjected to modification in two ways. First the electrolysis of the aqueous HI solution was combined with the original process to eliminate the HI separation step. The overall efficiency for this "Sb-I Hybrid Process" was estimated to be 33~37% when the recovery of heat was assumed to be 80%. The second modification was carried out by introducing calcium as an additional reaction medium. The resulting modified process, "Sb-I-Ca Process", consists of five reactions. It was found that all reaction- and separation-steps in this process could be conducted without serious difficulties. From a flow diagram made on the basis of the experimental results, the overall efficiency was estimated to be about 39% with an assumption of 80% heat recovery.

1. Proposal of Sb-I process

1.1. Introduction

The thermochemical hydrogen production from water is very attractive in the search for new energy carriers to replace the fossil fuels[1]. Many thermochemical water-splitting processes (cycles) have been reported in the literatures[2][3]. However, no processes seem satisfactory enough to be commercially acceptable at present, although a hybrid sulfuric acid cycle[4] and a sulfuric acid-hydrogen iodide cycle[5] are now being developed in the U.S.A. and in Europe. We have proposed a new water splitting process named "Sb-I Process"[6], which was devised as follows.

* Department of Materials Science and Technology

1.2. Process composition

First, we composed a general three-step process based on the considerations mentioned below.

$$AO_n + B + H_2O \rightarrow AO_{n+1} + H_2B \quad (1)$$

$$H_2B \rightarrow H_2 + B \quad (2)$$

$$AO_{n+1} \rightarrow AO_n + \frac{1}{2}O_2 \quad (3)$$

(1) : Water reaction.
(2) : Hydrogen-producing reaction.
(3) : Oxygen-producing reaction.

where AO_n and AO_{n+1} refer, respectively, to a lower oxide (or a metal) and the higher one, and B for a hydrogen acceptor. The considerations taken into account were;

a) From the viewpoint of overall efficiency, the process should be constructed of basic reactions as few as possible

Table 1 Candidates for AO_n-AO_{n+1} couple

$\frac{1}{2}As_2O_3-\frac{1}{2}As_2O_5$	$BaO-BaO_2$	$\frac{1}{2}Bi_2O_3-\frac{1}{2}Bi_2O_5$
$Cd_2O-2CdO$	$3CoO-Co_3O_4$	$Cu_2O-2CuO$
$3PbO-Pb_3O_4$	$\frac{1}{2}Pb_3O_4-\frac{3}{2}PbO_2$	$2Mn_3O_4-3Mn_2O_3$
$Mn_2O_3-2MnO_2$	$Hg-HgO$	$2NiO-Ni_2O_3$
$Pb-PbO$	$Ag-Ag_2O$	$\frac{1}{2}Sb_2O_3-\frac{1}{2}Sb_2O_5$

and the number of elements other than hydrogen and oxygen involved should be no more than two.

b) For the oxygen formation step, preferable is a thermal decomposition of a solid oxide, since such a reaction usually yields two easily separable products, the lower oxide and oxygen.

c) The oxidation of the lower oxide should be attained by the water reaction.

For the hydrogen acceptor B, iodine was chosen by considering the corrosive problem and the relative ease of the thermal decomposition of hydrogen iodide. As for AO_n-AO_{n+1} couples, a number of candidates in which the higher oxides can dissociate oxygen below 1300 K, a temperature attainable with high-temperature gas-cooled reactors[7], were screened from comprehensive chemistry books such as one by Gmelin[8] as shown in **Table 1**. Among these systems, only four, i.e., $3CoO-Co_3O_4$, $Cu_2O-2CuO$, $\frac{1}{2}As_2O_3-\frac{1}{2}As_2O_5$, $\frac{1}{2}Sb_2O_3-\frac{1}{2}Sb_2O_5$, were thermodynamically acceptable in the reaction (1)′, being associated with the standard free energy change less than 10 kcal/mol for the reaction (1)′ as shown in **Table 2**.

$$AO_n(s)+I_2(s)+H_2O(l) \rightarrow AO_{n+1}(s)+2HI(aq) \qquad (1)'$$

Table 2 Thermodynamic data for reaction (1)′

AO_n-AO_{n+1}	ΔH°_{298} (kcal/mol)	ΔG°_{298} (kcal/mol)
$\frac{1}{2}As_2O_3-\frac{1}{2}As_2O_5$	+10.6	+ 8.5
$3CoO-Co_3O_4$	− 3.4	− 1.7
$Cu_2O-2CuO$	− 2.8	+ 6.2
$\frac{1}{2}Sb_2O_3-\frac{1}{2}Sb_2O_5$	+10.5	+ 7.5

Further, preliminary experiments revealed that, of the four, $\frac{1}{2}Sb_2O_3-\frac{1}{2}Sb_2O_5$ couple was the most suitable; the other three systems were excluded because of such flaws as a slow reaction rate for $3CoO-Co_3O_4$, occurrence of a side-reaction for $Cu_2O-2CuO$, and harmfulness for $\frac{1}{2}As_2O_3-\frac{1}{2}As_2O_5$. The "Sb-I Process" thus constructed is expressed as follows;

$$\frac{1}{2}Sb_2O_3(s)+I_2(s)+H_2O(l) \rightarrow \frac{1}{2}Sb_2O_5(s)+2HI(aq) \qquad (4)$$

$$2HI(g) \rightarrow H_2(g)+I_2(g) \qquad (5)$$

$$\frac{1}{2}Sb_2O_5(s) \rightarrow \frac{1}{2}Sb_2O_3(s)+\frac{1}{2}O_2(g) \qquad (6)$$

1.3. Preliminary examination of each step

In reaction (4) solid Sb_2O_5 and aquous HI solution are obtained by a con-

tact of solid Sb_2O_3 and aqueous iodine solution at lower temperatures. This reaction is a well-known one[9] which has been applied to the volumetric analysis of Sb^{3+}. The aqueous HI obtained here is distilled to get gaseous HI, which can be thermally decomposed to hydrogen and gaseous iodine in reaction (5) at higher temperatures. As to reaction (5), it is well established that hydrogen iodide is ca. 25 per cent dissociated at 800 K[10]. The hydrogen generated will be separated from gaseous HI and iodine with a porous membrane. For the last reaction (6), published data[11] show that Sb_2O_5 when heated at about 1070 K transforms to Sb_2O_4, the complex oxide of trivalent and pentavalent antimony, and that Sb_2O_4 further decomposes to Sb_2O_3 above 1200 K. The produced Sb_2O_3 is sublimed to be separated from the reaction system, and recycled back to reaction (4).

Each reaction of this process is thermodynamically acceptable as shown in **Table 3**. Thus we conclude that these three reactions can be successfully combined to compose a water splitting process.

Table 3 Thermodynamic data for the Sb-I process

Step	$\frac{K}{T}$	$\frac{\Delta H^\circ}{kcal/mol}$	$\frac{\Delta G^\circ}{kcal/mol}$
(4)	298	+10.5	+ 7.5
(5)	800	+ 3.1	+ 6.0
(6)	1250	+31.2	+ 1.1

2. Investigation of Sb-I hybrid process

2.1. Introduction

Although all reactions of the Sb-I process proposed in the previous section are feasible thermodynamically, it has turned out that the peparation of HI gas from the aqueous solution after the first step consumes a considerable amount of thermal energy. In order to eliminate this difficulty, the electrolysis of the aqueous HI solution was introduced instead of the thermal decomposition of HI gas. The Sb-I hybrid process thus constructed is written as follows[12].

$$\frac{1}{2}Sb_2O_3(s) + I_2(s) + H_2O(l) \rightarrow \frac{1}{2}Sb_2O_5(s) + 2HI(aq) \quad (4)$$

$$2HI(aq) \xrightarrow{\text{Electrolysis}} H_2(g) + I_2(s) \quad (5)'$$

$$\frac{1}{2}Sb_2O_5(s) \rightarrow \frac{1}{2}Sb_2O_3(s) + \frac{1}{2}O_2(g) \quad (6)$$

2.2. Examination of each step

(a) $Sb_2O_3/I_2/H_2O$ reaction

The first step reaction was carried out in a mixed solvent system of CCl_4–H_2O. It was found that the produced HI could be extracted into the water phase while unreacted I_2 remained in CCl_4 phase. Thus the two components being easily separated. As shown in **Fig. 1**, a completion of the reaction required a long period when I_2 was reacted with a stoichiometric amount of Sb_2O_3. However, the reaction period could be decreased significantly by adding excess Sb_2O_3: at $Sb_2O_3/I_2=4$ the reaction was

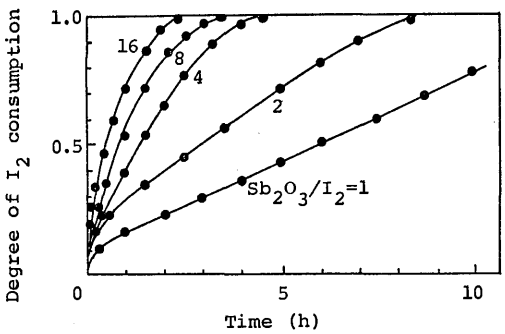

Fig. 1 Dependence of I_2 consumption on time.
I_2: 10.9 mol/m³, CCl_4: 50 cm³, H_2O: 50 cm³, Temp.: 298 K

completed in about 5 h. As for the concentration of produced HI, it was found that the HI concentration could not be increased more than 2 wt%; in case I_2 was added in excess of that composition, side reaction such as the formation of SbI_3 took place.

(b) Electrolysis of HI solution

As seen in **Table 4**[13], the standard electrode potentials show that HI can be electrolized at a cell voltage only about one half as large as H_2O is electrolized. The electrolysis of HI was actually examined by using ca. 2 wt% (0.1 M) HI solution. The polarization curve in **Fig. 2** indicate anode and cathode decomposition potentials of +0.28 and −0.32 V (vs. SCE), respectively, with a minimum anodic overpotential of ca. 0.05 V. The cell voltage at current density of 40 mA/cm² was 0.63 V, showing that no major overpotential was associated under the conditions.

Table 4 Standard electrode potential (V, 25℃)

$I_2+2e=2I^-$	+0.536
$I_3^-+2e=3I^-$	+0.536
$O_2+4H^++4e=2H_2O(l)$	+1.229
$2H^++2e=H_2$	±0.000

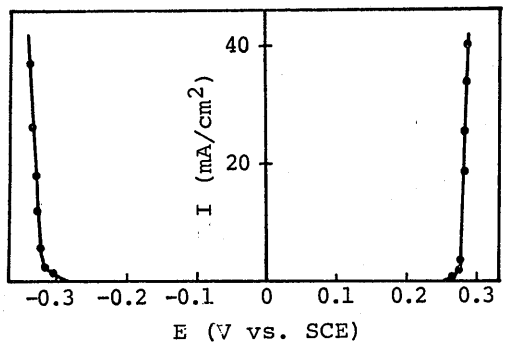

Fig. 2 I-E curve for 0.1 M HI solution at 288 K.

(c) Decomposition of Sb_2O_5

It is known that Sb_2O_5 is thermally decomposed to Sb_2O_3 through Sb_6O_{13} and Sb_2O_4[14]. **Fig. 3** shows the time courses of the rate of O_2 evolution in the decomposition of Sb_2O_5 to Sb_2O_3 at 1200 K and above. In the Sb_2O_5 decomposition two maxima appeared in the rate of O_2 evolution, which corresponded to $Sb_2O_5 \rightarrow Sb_6O_{13} \rightarrow Sb_2O_4$ and $Sb_2O_4 \rightarrow Sb_2O_3$, respectively. The rate of the second decomposition $Sb_2O_4 \rightarrow Sb_2O_3$ was small at 1200 K, but increased with a rise in temperature. The reaction went to completion in about 2 h at 1270 K.

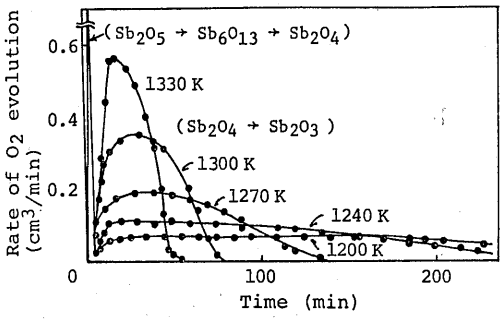

Fig. 3 Decomposition of Sb_2O_5 to Sb_2O_3 (N_2: 40 cm³/min).

2.3. Evaluation of Sb-I hybrid process

A flow diagram for the Sb-I hybrid process was constructed on the basis of the above mentioned results as shown in **Fig. 4**. The figures in the diagram represent the exothermal or endothermal heats (in unit of kcal) associated with respective steps.

The overall efficiency (η_{LHV}) of the process was evaluated on the conditions: i) the starting charge ratio of Sb_2O_3 to I_2 in the first step reaction is fixed at $a=Sb_2O_3/I_2=3$, ii) the cell voltage for the HI electrolysis is 0.7 or 0.9 V, and iii) the efficiency of heat→electricity conversion is 40%. **Fig. 5** shows η_{LHV} as a function of heat recovery. At 80% heat recovery η_{LHV} becomes 33~37%. It is seen that, at high heat reco-

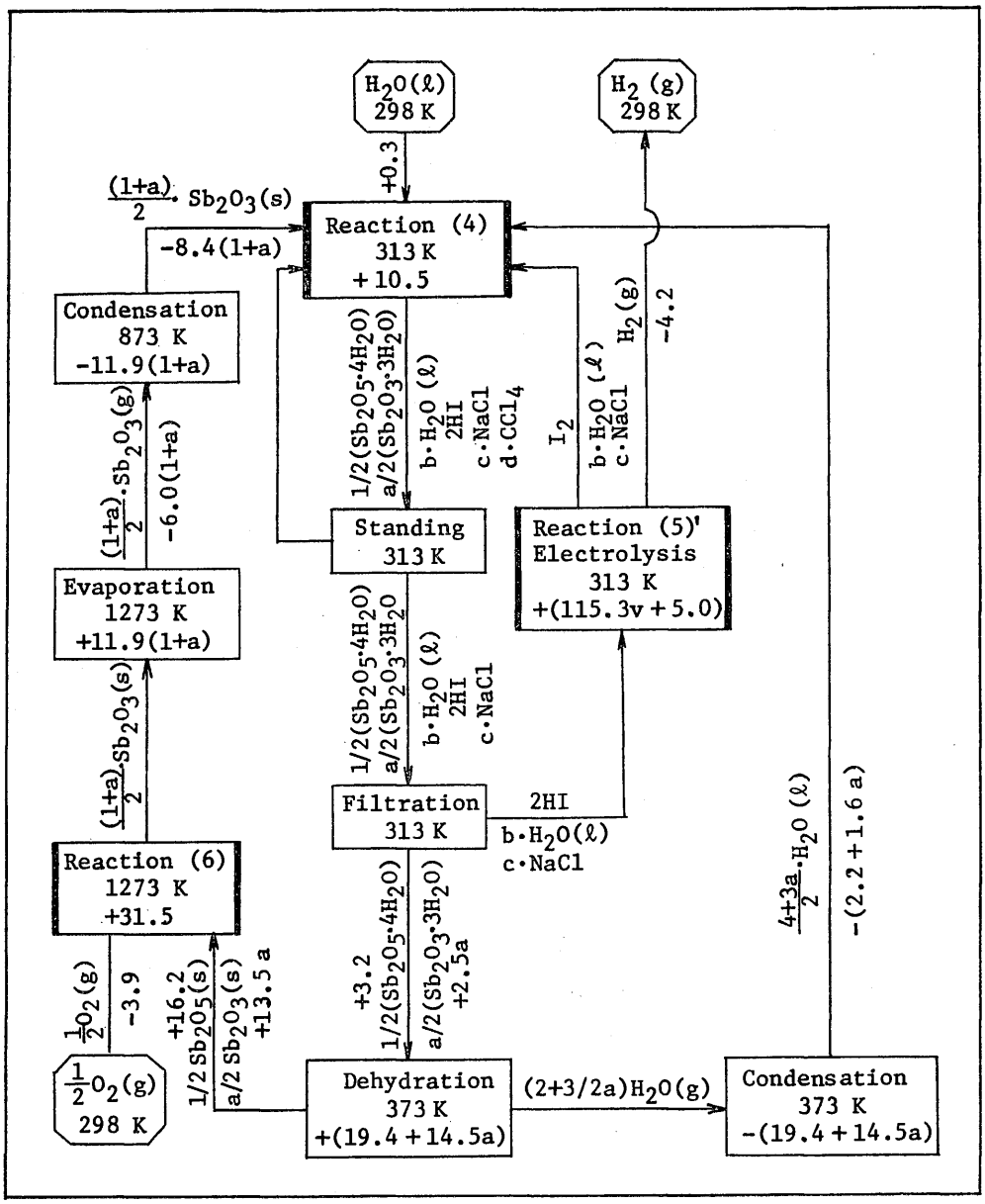

Fig. 4 Flow diagram of the Sb-hybrid process.

very, η_{LHV} for the process is considerably higher than the efficiency of conventional water electrolysis (20~25 %).

3. Proposal of Sb-I-Ca process

3.1. Introduction

The Sb-I hybrid process proposed in the previous section includes an electrolysis step which consumes an electric energy as large as 24.7 kcal/mol, or ca. 40 % of the absolute value of the standard free energy of formation of $H_2O(l)$. This means that the purity of thermochemical process is considerably

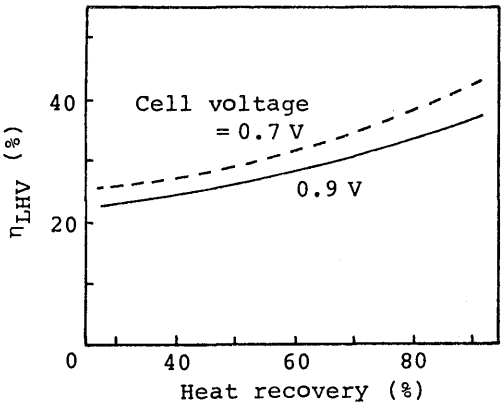

Fig. 5 Depenence of efficiency (η_{LHV}) on heat recovery ($Sb_2O_3/I_2=3$).

decreased in the process. This section deals with the purely thermochemical revision of the Sb-I process by use of calcium as an additional medium[15)16)].

3.2. Process modification

In order to increase the reaction yield of the first step of the Sb-I process, it was attempted to replace the solid-liquid reaction at room temperature by the following solid-gas reaction at high temperature.

$$Sb_2O_3(s)+I_2(g)+H_2O(g) \rightarrow Sb_2O_4(s)+2HI(g) \quad (7)$$

However, this reaction turned out to be a thermodynamically unfavorable one with a positive $\Delta G°$. In practice the predominant occurrence of reaction (8) was confirmed at 600 K. This suggests a possibility that reaction (7) may eventually achieved in two steps by combining reaction (8) with (9).

$$\frac{4}{3}Sb_2O_3+I_2 \rightarrow \frac{2}{3}SbI_3+Sb_2O_4 \quad (8)$$

$$\frac{2}{3}SbI_3+H_2O \rightarrow \frac{1}{3}Sb_2O_3+2HI \quad (9)$$

The $\Delta G°$ (kcal/mol) for reactions (8) and (9) are listed below.

T(K)	400	600	800	1000	1200
$\Delta G°_{(8)}$	−1.90	+3.43	+7.68	+12.89	+20.76
$\Delta G°_{(9)}$	+16.97	+12.57	+10.91	+9.29	+7.20

As seen from the list, reaction (9) becomes more favorable at high temperature. Experimental examinations, however, showed that reaction (9) hardly proceeded even at 1293 K. Then we tried further to decompose reaction (9) into two reactions by introducing an element M as a reaction medium as follows.

$$MI_2+H_2O \rightarrow MO+2HI \quad (10)$$

$$\frac{2}{3}SbI_3+MO \rightarrow MI_2+\frac{1}{3}Sb_2O_3 \quad (11)$$

Table 5 Thermodynamic data for reactions (10) and (11)

Reaction		$\Delta H°_{298}$ ($\Delta H°_{600}$) (kcal/mol)	$\Delta G°_{298}$ ($\Delta G°_{600}$) (kcal/mol)
$MgI_2+H_2O \rightarrow MgO+2HI$	(10 a)	+14.20	+5.54
$\frac{3}{4}FeI_2+H_2O \rightarrow \frac{1}{4}Fe_3O_4+\frac{1}{4}H_2+\frac{3}{2}HI$	(10 b)	+19.18	+14.56
$CaI_2+H_2O \rightarrow CaO+2HI$	(10 c)	+47.10	+38.64
$MgO+\frac{2}{3}SbI_3 \rightarrow MgI_2+\frac{1}{3}Sb_2O_3$	(11 a)	+14.53 (+10.29)	+14.30 (+15.33)
$\frac{1}{4}Fe_3O_4+\frac{2}{3}SbI_3 \rightarrow \frac{3}{4}FeI_2+\frac{1}{4}I_2+\frac{1}{3}Sb_2O_3$	(11 b)	+ 6.41 (+ 1.01)	+ 5.09 (+ 9.59)
$CaO+\frac{2}{3}SbI_3 \rightarrow CaI_2+\frac{1}{3}Sb_2O_3$	(11 c)	−18.37 (−22.73)	−18.90 (−17.89)

As the candidate of element M were selected Mg, Fe, and Ca, on the basis that their iodides undergo hydrolysis easily. Thermodynamic data for reactions (10) and (11) are listed in **Table 5.** As far as reaction (10) is concerned, Mg seems to be most favorable element. However, Mg as well as Fe were inadequate for reaction (11): the yield of reaction (11) was 74.2% for Ca, while those were only 1.4% and 2.3% for Mg and Fe, respectively. After these examinations, we concluded that only Ca could be a candidate for M with its enough reactivities in both (10) and (11).

3.3. New modified process

Through the exploration mentioned above, a new modified process, "Sb-I-Ca Process", was constructed, which consists of the following five reactions.

$$\frac{4}{3}Sb_2O_3 + I_2 \rightarrow \frac{2}{3}SbI_3 + Sb_2O_4 \qquad (12)$$

$$\frac{2}{3}SbI_3 + CaO \rightarrow CaI_2 + \frac{1}{3}Sb_2O_3 \qquad (13)$$

$$CaI_2 + H_2O \rightarrow CaO + 2HI \qquad (14)$$

$$2HI \rightarrow H_2 + I_2 \qquad (15)$$

$$Sb_2O_4 \rightarrow Sb_2O_3 + \frac{1}{2}O_2 \qquad (16)$$

It is seen that reactions (12), (13) and (14) are introduce in place of the first step reaction of the original Sb-I process. **Fig. 6** shows $\Delta G°$ vs. temperature for the respective reactions. Each reaction except (14) has the temperature region, where $\Delta G°$ becomes less than 10 kcal/mol below 1300 K, assuring that it is thermodynamically acceptable as a constituent reaction of the process. While $\Delta G°$ of (14) remains still a large positive value at high temperature in the figure, it was verified experimentally that the reaction could take place at considerable ease.

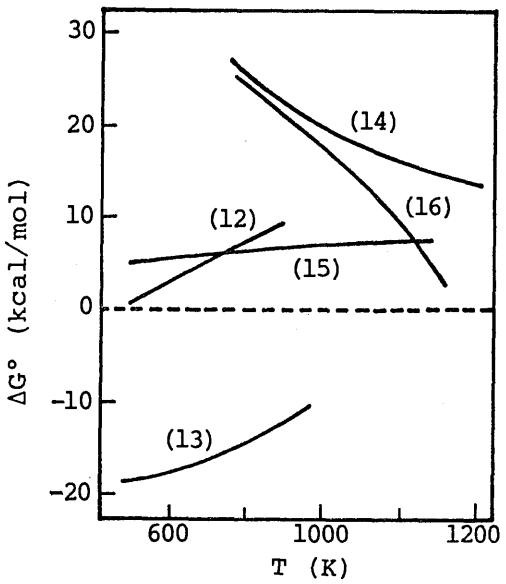

Fig. 6 Temperature dependence of $\Delta G°$ for each reaction of the Sb-I-Ca process.

4. Examination of Sb-I-Ca process

4.1. Feasibility of each step

(a) Sb_2O_3/I_2 reaction

The reaction between Sb_2O_3 and I_2 was studied as follows. An excess of gaseous I_2 ($I_2/Sb_2O_3 = 1.2 \sim 7.5$ equivalent ratios) was brought into contact with pulverized Sb_2O_3 in the temperature range $550 \sim 750$ K. The reaction was found to proceed scarcely at a temperature below 373 K, in spite of the favorable thermodynamic data : $G°_{298} = -2.7$ kcal/mol. The results in **Fig. 7** show that the reaction is driven to completion in 2 h at 720 K when the number of I_2 equivalent to Sb_2O_3 is 3.0. The solid Sb_2O_4 formed was easily separated from the gaseous mixture of the produced SbI_3 and the excess I_2. Subsequently, SbI_3 could be separated from gaseous I_2 by liquefaction on cooling the mixture to a moderate temperature, e.g., 673 K. As shown in the flow diagram repre-

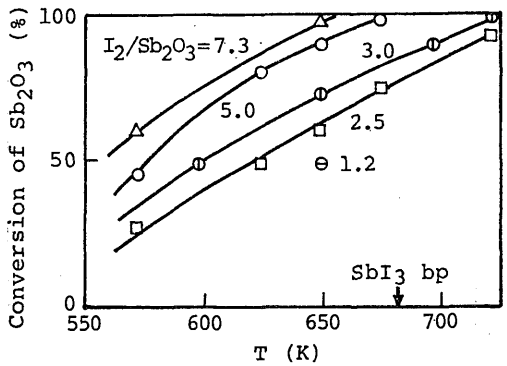

Fig. 7 Temperature dependence of Sb_2O_3 conversion in reaction (12). Reaction time: 2 h

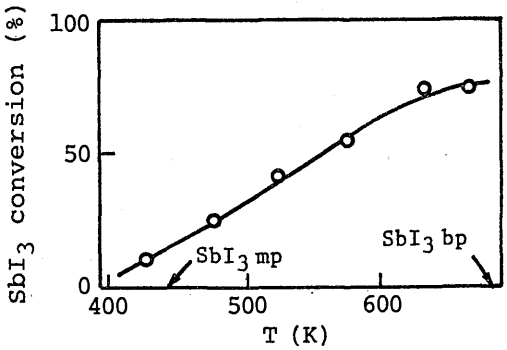

Fig. 8 Temperature dependence of SbI_3 converison in reaction (13). SbI_3/CaO=1 (equiv. ratio), Reaction time: 6 h

sented later, the separated products, Sb_2O_4 and SbI_3, go to reactions (16) and (13), respectively; the gaseous I_2 is recycled back to reaction (12).

(b) SbI_3/CaO reaction

The reaction between SbI_3 and CaO is thermodynamically favorable at all temperatures: $\Delta G^\circ \lesssim -10$ kcal/mol. This was in fact confirmed experimentally. The liquefied SbI_3 was allowed to react with pulverized CaO in a sealed tube. The formation of the solid products, CaI_2 and Sb_2O_3 was confirmed by X-ray diffraction and chemical analysis. As **Fig. 8** shows, the conversion of SbI_3 increased with a rise in reaction temperature. The CaO conversion reached about 75% in 60 h at 633 K with the equivalent ratio CaO/SbI_3=1 as shown in **Table 6**, but did not go further under the present experimental conditions. As CaO/SbI_3=4, the SbI_3 conversion reached 100%. This means that no particular separation process for SbI_3 is necessary after reaction (13) under these conditions. However, it is still necessary to separate the produced Sb_2O_3 (solid) from the solid mixture of CaI_2 and CaO, since the presence of Sb_2O_3 harms the subsequent reactions

Table 6 Conversion of reactants in reaction (13) under various conditions[a)]

SbI_3/CaO[b)]	Time (h)	SbI_3 conv. (%)	CaO conv. (%)
4/1	6	18.9	75.6
2/1	6	37.2	74.4
1/1	6	73.7	73.7
1/1	60	75.1	75.1
1/2	6	87.9	44.0
1/4	6	100.0	25.0

a) Reaction temp.: 633 K.
b) Equivalent ratio.

(14) and (15). Fortunately, the separation is relatively easy because their solubilities in water (100 g) greatly different, i.e., 215.7 g for CaI_2 and 8.45×10^{-4} g for Sb_2O_3 at 298 K.

(c) CaI_2/H_2O reaction and HI decomposition reaction

The hydrolysis of CaI_2 and the decomposition of HI were experimented as follows. A carrier gas, He, was saturated with water vapor in the temperature range 298~348 K, and passed over molten CaI_2 loaded in a porcelain boat at temperature above 973 K. The surface area of the melt was about 5 cm^2 and the contact time was estimated as 15 s. The hydrolysis produces HI ac-

cording to reaction (14), but at the same time a part of the produced HI is further decomposed thermally to H_2 and I_2 according to reaction (15) under these conditions. Therefore, in order to determine the degree of reaction, all the effluent containing HI, I_2, H_2 and H_2O was absorbed in water and the respective amounts of I^- and I_2 were analyzed by iodometry. Further, the quantities of H_2 gas were determined by gas chromatography. The solid CaO produced was identified on the basis of X-ray diffraction pattern.

The results are depicted in **Fig. 9**. Though thermodynamic calculations indicated that the equilibrium conversion of H_2O was fairly low as shown by the broken lines, the experimental conversion was unexpectedly high at temperatures above the melting point of CaI_2 (1052 K). At a He/H_2O mole ratio of 50, for instance, the H_2O conversion reached 60 % at 1100 K while the calculation predicted only 7 %. Although the inert gas affects the equilibrium conversion favorably, a conversion level of about 20 % is still expected at 1173 K even in the absence of it ($He/H_2O=0$).

On the assumption that a chemical equilibrium is attained, the equilibrium constant (K_p) for reaction (14) was evaluated as a function of temperature as shown in **Fig. 10**. It is clear that there are great differences between the observed K_p and that estimated from the reported thermodynamic data[17)20)]; at 1100 K the observed K_p is larger by a factor of about 100. The observed value of ΔG° was 5.9 kcal/mol in contrast to 17.9 kcal of the estimated value based on the thermochemical data. Similarly, the observed and estimated values of ΔH° were 45 and 103 kcal/mol, respectively, at the temperature range 900~1000 K. Similar discrepancies between the observed and estimated equi-

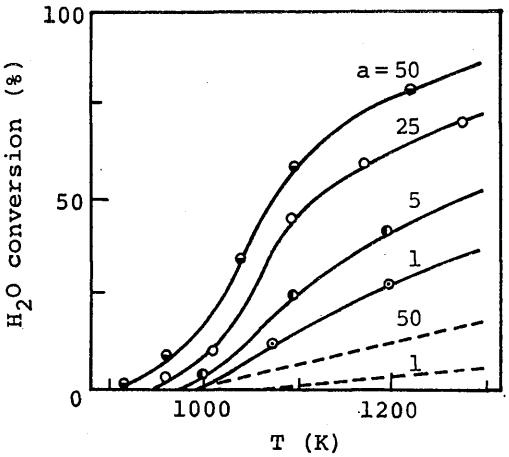

Fig. 9 Temperature dependence of H_2O conversion in reaction (14). Solid lines: this work, broken lines: calculated, a: number of He mole to H_2O

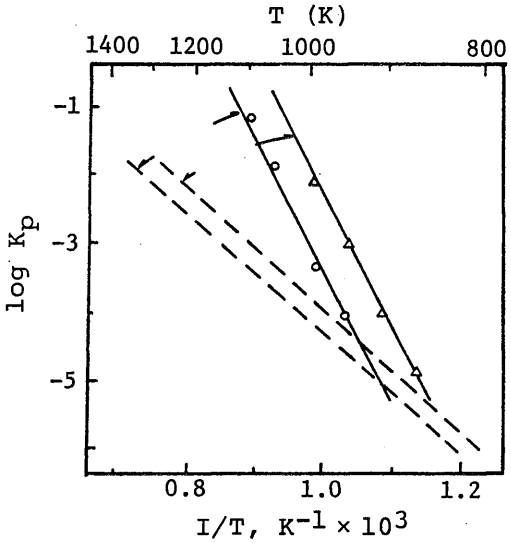

Fig. 10 Equilibrium constant for the hydrolysis of CaI_2 and $CaBr_2$.
—o— : This work
—△— : C. Marchetti[21)]
– – – : calculated

librium constants have been reported for the hydrolysis of $CaBr_2$[21] as also presented in **Fig. 10**. These discrepancies may have been caused in part by the uncertainty of the thermodynamic data used, but more plausibly they may be attributed to the formation of a melt solution of CaI_2 or $CaBr_2$ with CaO, because the hydrolysis was carried out at temperatures above the melting points of the calcium halides. Anyway, it is clear that, owing to such an unexpectedly high reactivity, the high temperature hydrolysis of CaI_2 is acceptable as a reaction step of the thermochemical process.

The extent of HI dissociation in reaction (15), which was determined from the analyses of I^- and I_2 contained in the effluent as mentioned before, was found to be very close to the equilibrium value at higher temperatures: 26% at 1100 K, and 28% at 1200 K.

After reactions (14) and (15), the gaseous mixture consisting of H_2, I_2, HI and H_2O is sent to a separation step, while the solid CaO is returned to reaction (13) to start the cycle over again. The separation step of the gaseous compounds was not studied in detail, but the following method is suggested. First, I_2 is condensed from vapor phase by cooling it to a moderate temperature, e.g., 433 K (the condensation pressure of I_2= 0.53 atm). The liquefied I_2 is evaporated and recycled to reaction (12). Next, H_2 is separated from gaseous HI and H_2O; the use of membranes such as ones made with palladium and ceramics may be conceived. The mixture of H_2O and HI is returned to reaction (14) without further separation.

(d) Decomposition of Sb_2O_4

The decomposition of Sb_2O_4 was found to begin at about 1170 K in a nitrogen gas stream as mentioned before. The volatile Sb_2O_3 produced can be easily separable from the unreacted Sb_2O_4. The vapor phase is then cooled, and the Sb_2O_3 solid separated from O_2 is sent back to reaction (12).

The value of ΔG°_{1300} for this reaction was calculated to be 20.4 kcal/mol based upon the thermodynamic data[17] published in 1973. This is too large a value considering the ease of the reaction as demonstrated above. The experiments above indicate $\Delta G^\circ_{1300}=3.7$ kcal, a value which has been proved to agree with that calculated from the thermodynamic data[20] published in 1977.

4.2. Evaluation of the Sb–I–Ca process

Based on the examinations just described, a schematic flow diagram of mass and heat was constructed for the Sb–I–Ca process as shown in **Fig. 11**. The diagram as a whole should contain five reaction steps [R-(12) to R-(16)], eight phase-transition steps and one gas-separation step. The operation temperature of each step was set as indicated in view of the results described. The mass and heat flow was expressed on the basis of 1 mole H_2 production. On this basis, all the intermediate compounds should be taken in excess depending on the conversion levels of the respective reaction steps. Thus, I_2, CaO, H_2O and HI were used in excess by 2, 2, 16 and 6 mole, respectively, in R-(12) through R-(15). The conversion levels were assumed as follows: 100% (with respect to Sb_2O_3) in R-(12), 100% (SbI_3) in R-(13), 20% (H_2O) and 100% (CaI_2) in R-(14), 25% (HI) in R-(15), and 100% (Sb_2O_4) in R-(16). The heat

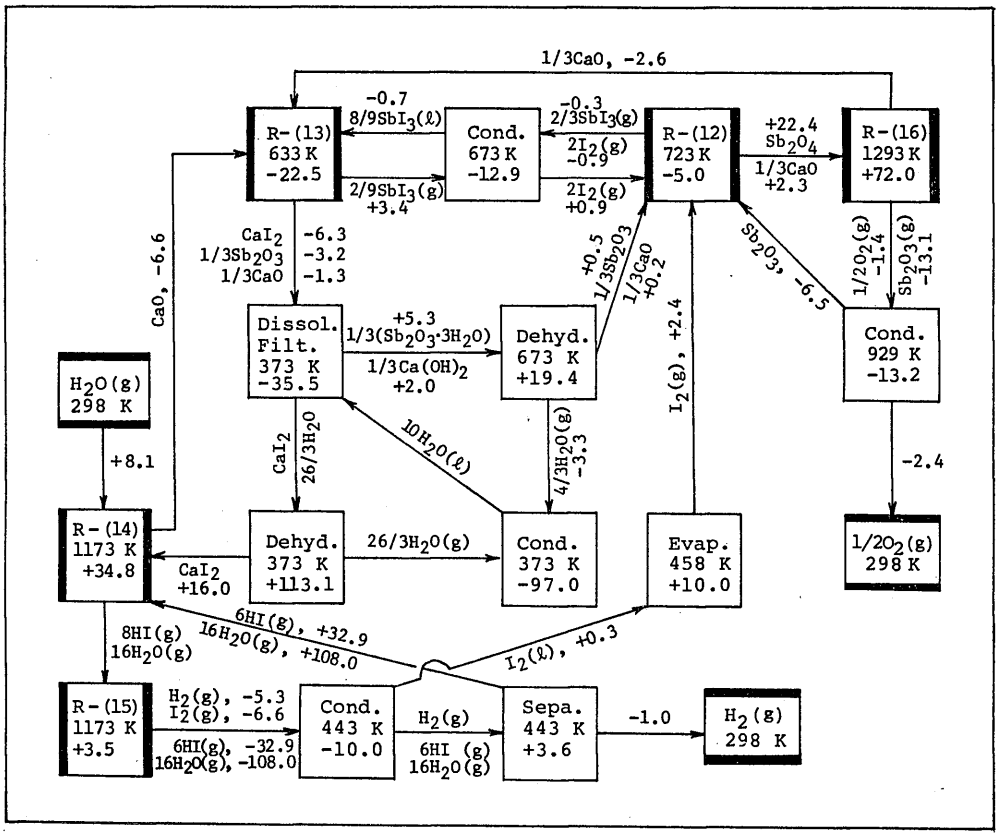

Fig. 11 Flow diagram of the Sb-I-Ca process.
R: Reaction, Cond.: Condensation, Dissol.: Dissolution, Filt.: Filtrataion, Dehyd,: Dehydration, Evap: Evaporation, Sepa.: Separation

liberated at each step was indicated by kcal on the same basis. The heat associated with heating or cooling of materials between the steps was calculated by use of heat capacities of the respective materials. The work (W_{th}) for the gas separation of H_2 was calculated on the assumption of an ideal solution.

$$W_{th} = -RT[N_a \ln X_a + (N_b + N_c)\ln(X_b + X_c)] \quad (17)$$

where $N_a(X_a)$, $N_b(X_b)$ and $N_c(X_c)$ are number of moles (mole fractions) of H_2, HI and H_2O, respectively. This gave +3.6 kcal as shown in the diagram. Power for transportation, crushing, and mixing of reactants are neglected.

The overall thermal efficiency, η_{LHV} is defined[22] as

$$\eta_{LHV} = \frac{-\Delta H^\circ_{298}(H_2O(g)) \times 100}{\Sigma Q_+ + \varepsilon_R \cdot \Sigma Q_- + W_{th}/\varepsilon_S \cdot \varepsilon_{QW}} \quad (18)$$

where ΣQ_+ and ΣQ_- represent the sums of the heat associated with all endothermic and exothermic steps, respectively, ε_R the efficiency of heat recovery, W_{th} the theoretical work of separation, ε_S the efficiency of separation, ε_{QW} the efficiency of conversion from heat to work. The heat for endothermic and exothermic steps are summarized in **Table 7**: ΣQ_+ and ΣQ_- are cal-

Table 7 Heat balance for the Sb-I-Ca process

Step	Endothermic heats (kcal)	Exothermic heats (kcal)
Reactions (5)[a)]	+110.3	− 27.5
Phase changes and dissolution (8)[a)]	+142.5	−168.6
Heating and cooling operations (20)[a)]	+204.7	−202.4
Total	+457.5 (ΣQ_+)	−398.5 (ΣQ_-)

a) The figures in the ( ) indicate the total number of reactions, phase changes and operations involved.

culated to be +457.5 kcal and −398.5 kcal, respectively. As the table shows, a major part of ΣQ_+ is responsible to the heat associated with the heating operations of reactants. This heat is therefore a major factor affecting η_{LHV} of this process. On assuming that $\varepsilon_S=1.0$ and $\varepsilon_{QW}=0.4$, η_{LHV} is shown as a function of ε_R in **Table 8**. At $\varepsilon_R=0.8$ the overall efficiency is about 39%, a value which is well competitive with that of the electrolytic hydrogen production.

However, the following reservations are to be mentioned. The first point is the length of some of the reaction times: 2 h for reaction (12) and 6 h for reaction (13), etc. These long reaction times would have two disadvantageous effects on the development of a "working" cycle, i.e., the reactions would have to be large and hence capital-cost intensive, and the inventory of intermediate chemicals would also be great. The second is a problem in transferring enormous amounts of heat at temperatures over 1000 K. These heat transfer steps would pose large engineering as well as capital-cost problems. The third point is hydrogen removal techniques with membranes which have not been successful economically up to data.

With these reservations being attached, the Sb-I-Ca process is evaluated to present a concept of new thermochemical cycles for water splitting though the commercialization involves several difficulties at present.

Table 8 Total thermal efficiency (η_{LHV}) for the Sb-I-Ca process

ε_R	0.4	0.5	0.6	0.7	0.8	0.9
η_{LHV}(%)	18.9	21.7	25.5	30.8	39.1	53.4

References

1) D. P. Gregory: Scient. Am., **228**, 13 (1973).
2) R. E. Chao: Ind. Eng. Chem. Prod. Res. Dev., **13**, 94 (1974).
3) J. E. Zajic, A. Margaritis and J. D. Brossean: Int. J. Hydrogen Energy, **4**, 385 (1979).
4) G. H. Farbman, R. L. Ammon, C. C. Hardman and S. Spewock: Proc. 12 th IECEC, Wachington, D. C. (1977).
5) J. D., Graaf, K. H. McCorkle, J. H. Norman, T. Ohno, R. Sharp and G. B. Webb: Proc. 2nd World Hydrogen Energy Conf., Zurich (1978).
6) N. Miura, N. Yamazoe and T. Seiyama: Chem. Lett., **1976**, 1389.
7) W. Häfele: Science, **184**, 360 (1974).
8) L. Gmelin: "Handbuch der Anorganishen Chemie", Verlag Chemie, Weinheim/Bergstrasse, West Germany, ed. 8.
9) I. M. Kolthoff and R. Belcher: "Volumetric Analysis III", Interscience Pub. Inc., New York (1957).
10) M. Bodenstein: Z. Phys. Chem., **13**, 56 (1894); ibid., **22**, 1 (1897); ibid., **29**, 295 (1897).
11) A. Simon and E. Thaler: Z. Anorgan.

Allgem. Chem., **161**, 113 (1927).
12) N. Miura, K. Tokunaga, T. Harada, N. Yamazoe and T. Seiyama: Denki Kagaku, **46**, 113 (1978).
13) J. A. Dean ed.: "Lange's Handbook of Chemistry", 11th Ed., McGraw-Hill Inc., N. Y. (1973).
14) V. G. Trofimov, A. I. Sheinkman and G. V. Kleshehev: J. Struct. Chem., **14**, 245 (1973).
15) N. Miura, N. Yamazoe and T. Seiyama: Nippon Kagaku Kaishi, **1979**, 474.
16) N. Miura, N. Yamazoe and T. Seiyama: Chem. Lett., **1978**, 81.
17) I. Barin and O. Knache: "Thermochemical Properties of Inorganic Substances", Springer-Verlag, Berlin (1973).
18) N. Miura, N. Yamazoe and T. Seiyama: Int. J. Hydrogen Energy, **4**, 279 (1979).
19) N. Miura, N. Yamazoe and T. Seiyama: Nippon Kagaku Kaishi, **1979**, 479.
20) I. Barin, O. Knach and O. Kubaschewski: "Thermochemical Properties of Inorganic Substances", Supplement, Springer-Verlag, Berlin (1977).
21) C. Marchetti: Chem. Econ. Eng. Rev., 5, 7 (1973).
22) J. E. Funk, W. L. Conger and R. H. Carty: Proc. THEME Cong., Miami, Florida (1974).