九州大学学術情報リポジトリ
Kyushu University Institutional Repository

RANDOM COMBINED FRACTIONAL FACTORIAL DESIGNS 1 ; THEORY AND APPLICATION OF THE RANDOM COMBINED FRACTIONAL FACTORIAL DESIGNS (RACOFFD)

Yamakawa, Norihiro
Kasado Works, Hitachi Ltd.

https://doi.org/10.5109/13015

出版情報：統計数理研究. 11 (3/4), pp.1-38, 1965-03. Research Association of Statistical Sciences
バージョン：
権利関係：

KYUSHU UNIVERSITY

RANDOM COMBINED FRACTIONAL FACTORIAL DESIGNS 1; THEORY AND APPLICATION OF THE RANDOM COMBINED FRACTIONAL FACTORIAL DESIGNS (RACOFFD)

By

Norihiro YAMAKAWA*

(Received November 25, 1964)

0. Introduction

In the ordinary fractional factorial designs, an experimenter can perform N trials to estimate P unknown parameters $\alpha'_1, \alpha'_2, \cdots\cdots, \alpha'_{P-1}$ and α'_P. These N experimental points correspond to the N points in the P dimensional factor space (refer to G. E. P. Box [4] and [5]) which is constructed by the values of factors $x_1, x_2, \cdots, x_{P-1}$ and x_P corresponding to the P unknown parameters $\alpha'_1, \alpha'_2, \cdots, \alpha_{P-1}$ and α'_P. In these cases, he wishes to fix the residual factors $\xi_1, \xi_2, \cdots, \xi_{R-1}$ and ξ_R at a point $\Xi_0=(\xi_{10}, \xi_{20}, \cdots, \xi_{R-1,0}, \xi_{R0})$ over the whole time interval of the above N trials. Although he wishes so, in the practical aspect of experiments, he can't necessarily fix these levels of the residual factors at a point in the residual factor space.

In these circumstances, we wish to infer P unknown parameters $\alpha'_1, \alpha'_2, \cdots, \alpha'_{P-1}$ and α'_P. Consequently, these situations induce several statistical problems for us. That is to say, we have N points $\Xi_1=(\xi_{11}, \cdots, \xi_{R1})$, $\Xi_2=(\xi_{12}, \cdots, \xi_{R2})$, $\cdots$, $\Xi_N=(\xi_{1N}, \cdots, \xi_{RN})$ on the residual factor space which is constructed by the residual factors $\xi_1, \xi_2, \cdots, \xi_{R-1}$ and ξ_R as a noisy behaviour for our present purpose, that is the inference about the P unknown parameters $\alpha'_1, \alpha'_2, \cdots, \alpha'_{P-1}$ and α'_P by the N trials at the points $X_1=(x_{11}, x_{21}, \cdots, x_{P1})$, $X_2=(x_{12}, x_{22}, \cdots, x_{P2})$, $\cdots$, $X_N=(x_{1N}, x_{2N}, \cdots, x_{PN})$ on the P dimensional factor space.

In order to reduce these noisy effects of residual factors to our inference of the unknown P parameters $\alpha'_1, \alpha'_2, \cdots, \alpha_{P-1}'$ and α'_P, the randomization procedure (refer to Kitagawa [15]) was prepared, as follows.

(1) A permutation

$$\Pi=\begin{pmatrix} 1 & 2 & \cdots & N \\ \pi(1) & \pi(2) & \cdots & \pi(N) \end{pmatrix}$$

is chosen with equal probability, $1/N!$, from the set of all possible permutations of N numbers 1, 2, $\cdots$, N–1 and N.

(2) To each permutation, Π, we perform N trials $X_{\pi(1)}, X_{\pi(2)}, \cdots,$

* Kasado Works, Hitachi Ltd.

$X_{\pi(N-1)}$ and $X_{\pi(N)}$.

If we can eliminate above noisy effects of the residual factors by these randomization procedures we can estimate P $(>N)$ unknown parameters by the method that the several randomized fractional factorial designs are mutually independently combined (refer to Taguchi [27] and [28]). More precisely, the following random combined fractional factorial designs can be considered.

(A) List up the factors in problem.
(B) Determine the levels of the values of these factors.
(C) Consider the interactions of these factors in above levels of factors.
(D) Divide into two groups of these factors in which two factors in different groups are not interacted each other.
(E) Allocate these two groups of factors to two fractional factorial designs with equal size, respectively.
(F) Combine randomly these two fractional factorial designs.
(G) Perform experimentations randomly with respect to the all combinations of above factors allocated in the randomly combinated fractional factorial designs.
(H) Analyse the data observed in the all combinations of all factors by the method of ordinary analysis of variances with respect to the 1st group of factors allocated in a fractional factorial designs, and analyse these same data by the same method with respect to the 2nd group of factors allocated in the 2nd fractional factorial design.

In the same line of designs of experiment, we have several references such as Satterthwaite [25], Budne [9], Anscombe [1] and Brooks [8]. Furthermore, we have theoretical researches by Dempster [10], [11] and Takeuchi [29], [30] and [31].

The present paper will give us the results of the investigation concerning to the noisy effects as a sampling distribution from the finite populations to our inference with respect to the unknown parameters $\alpha'_1, \alpha'_2, \cdots, \alpha_{P-1}'$, and α'_P.

1. Problem of the random combined fractional factorial designs (RACOFED) and resumé of main results

1.1 Statement of the problem

1.1.1 Mathematical formulation

Let us consider a linear regression model involving $P+R$ unknown parameters $\alpha'_1, \cdots, \alpha'_P$ and $\beta'_1, \cdots, \beta'_R$, such that

(1.1.1) $$\zeta_{P+R}(x_1, x_2, \cdots, x_P ; \xi_1, \xi_2, \cdots, \xi_R) = \sum_{p=1}^{P} \alpha'_p x_p + \sum_{r=1}^{R} \beta'_r \xi_r$$

where $x_1, x_2, \cdots, x_P, \xi_1, \xi_2, \cdots, \xi_R$ are fixed variates.

Let D be a $(P+R) \times N$ design matrix

(1.1.2) $$D = \begin{vmatrix} D_P \\ D_R \end{vmatrix}$$

and let D_P be a $P(<N) \times N$ design matrix in prescribed factor space and D_R be a $R\ (<N) \times N$ residual design matrix in prescribed residual factor space such that

(1.1.3) $$D_P = \begin{vmatrix} x_{11} & x_{12} & \cdots & x_{1N} \\ x_{21} & x_{22} & \cdots & x_{2N} \\ \cdots & \cdots & \cdots & \cdots \\ \cdots & \cdots & \cdots & \cdots \\ x_{P1} & x_{P2} & \cdots & x_{PN} \end{vmatrix}$$

and

(1.1.4) $$D_R = \begin{vmatrix} \xi_{11} & \xi_{12} & \cdots & \xi_{1N} \\ \xi_{21} & \xi_{22} & \cdots & \xi_{2N} \\ \cdots & \cdots & \cdots & \cdots \\ \cdots & \cdots & \cdots & \cdots \\ \xi_{R1} & \xi_{R2} & \cdots & \xi_{RN} \end{vmatrix} .$$

The observed value y_n at a point $(X_n, \Xi_n) = (x_{1n}, \cdots, x_{Pn} ; \xi_{1n}, \cdots, \xi_{Rn})$ is assumed to be

(1.1.5) $$y_n = \sum_{p=1}^{P} \alpha'_p x_{pn} + \sum_{r=1}^{R} \beta'_r \xi_{rn} + \varepsilon_n$$

where $\{\varepsilon_n\}$ $(n = 1, 2, \cdots, N)$ is assumed to be distributed independetly according to the normal distribution $N(0, \sigma_2^2)$ with a common unknown variance σ_2^2.

We are now interested with the situation (refer to Bancroft [2], Kitagawa [14], [16] and [18]) of an experimenter for whom the model (1.1.1) is not completely specified and who may assume under his own grounds a response function of the form

(1.1.6) $$\zeta_P(x_1, x_2, \cdots, x_P ; \xi_1, \xi_2, \cdots, \xi_R) = \sum_{p=1}^{P} \alpha'_p x_p$$

with a certain number P of unknown parameters $\alpha'_1, \alpha'_2, \cdots, \alpha'_{P-1}$ and α'_P.

Under this situation he may think it better to have the least square estimates $\alpha'_1, \cdots, \alpha_{P-1}$ and α'_P under his own assumption that

(1) $$\beta'_1 = \beta'_2 = \cdots = \beta'_R = 0$$

or

(2)
$$\begin{array}{l} \xi_{11}=\xi_{12}=\cdots=\xi_{1N} \\ \xi_{21}=\xi_{22}=\cdots=\xi_{2N} \\ \cdots\cdots\cdots\cdots\cdots\cdots\cdots \\ \cdots\cdots\cdots\cdots\cdots\cdots\cdots \\ \xi_{R1}=\xi_{R2}=\cdots=\xi_{RN} \end{array}$$

the current procedure of least square estimations will give him the normal equations

(1.1.7)
$$\sum_{q=1}^{P} a_{pq}\hat{\alpha}'_q=B_p \quad , \qquad (p=1,\ 2,\cdots,\ P)$$

where

(1.1.8)
$$\sum_{n=1}^{N} x_{pn}\, x_{qn}=a_{pq} \quad , \qquad (p,q=1,\ 2,\cdots,\ P)$$

and

(1.1.9)
$$\sum_{n=1}^{N} x_{pn}y_n=B_p \quad , \qquad (p=1,\ 2,\cdots,\ P)\ .$$

Let the rank of the $P\times P$ matrix $\|a_{pq}\|$ $(p,q=1,\ 2,\cdots,\ P)$ be equal to P, and let the $P\times P$ inverse matrix be denoted by $\|C_{pq}\|=\|a_{pq}\|^{-1}$.

If it can be assumed that (1̊) $\beta'=\cdots=\beta'_R=0$ or (2̊) $\xi_{11}=\xi_{12}=\cdots=\xi_{1N}$ $\xi_{21}=\xi_{22}=\cdots=\xi_{2N},\ \cdots,\ \xi_{R1}=\xi_{R2}=\cdots=\xi_{RN}$ then we can estimate the unknown parameter α'_p for a particular p $(1\leqq p\leqq P)$ by the efficient and unbiased estimate $\hat{\alpha}'_p$ $(p=1,\ 2,\cdots,\ P)$ and we can test a null hypothesis H_0: $\alpha'_p=0$ for a particular p $(1\leqq p\leqq P)$ by appealing to statistic F_p, defined by

(1.1.10)
$$F_p=(N-P)(\hat{\alpha}'_p)^2\Big/C_{pp}\sum_{n=1}^{N}(y_n-\sum_{p=1}^{P}\hat{\alpha}'_p x_{pn})^2$$

which is distributed exactly according to the F-distribution with the pair of degrees of freedom $(1,\ N-P)$ under the null hypothesis.

However, in our real situation, we are not certain enough to assume (1̊) $\beta'_1=\beta'_2=\cdots=\beta'_R=0$ and (2̊) $\xi_{11}=\xi_{12}=\cdots=\xi_{1N},\ \xi_{21}=\xi_{22}=\cdots=\xi_{2N},\ \cdots,\ \xi_{R1}=\xi_{R2}=\cdots=\xi_{RN}$ and still we would appeal to the statistic F_p.

1.1.2 The distribution function of the statistics $\hat{\alpha}'_p$, $\sum_{n=1}^{N} e_n^2$ and others under our real situation

Henceforth we are concerned with a model

(1.1.11)
$$y_n=\sum_{p=1}^{P}\alpha'_p x_{pn}+v'_n+\dot{\varepsilon}_n$$

under the following situations.

DEFINITION 1: (1)

(1.1.12)
$$v'_n\overset{d}{=}\sum_{r=1}^{R}\beta'_r\,\xi_{rn}$$

where (i) $\beta'_1, \beta'_2, \cdots, \beta'_R$ are not necessarily zero and (2) $\xi_{r1}, \xi_{r2}, \cdots, \xi_{rN}$, $(r=1, 2, \cdots, R)$, are not necessarily equal to each other.

(2) The design matrix D_P $(P<N)$ is a sub-matrix

$$D_P = \begin{Vmatrix} x_{11} & x_{12} & \cdots & x_{1N} \\ x_{21} & x_{22} & \cdots & x_{2N} \\ \cdots & \cdots & \cdots & \cdots \\ x_{P1} & x_{P2} & \cdots & x_{PN} \end{Vmatrix} \tag{1.1.13}$$

of the complete two level $N \times N$ orthogonal array, which will be abbreviated as O. A. in the following discussions (refer to Plackett and Burman [24], Box and Hunter [5], [6], and Shimada [26] Taguchi [27])

$$\| x_{pn} \| = \begin{Vmatrix} x_{11} & \cdots & \cdots & \cdots & x_{1N} \\ \cdots & \cdots & \cdots & \cdots & \cdots \\ x_{P1} & \cdots & \cdots & \cdots & x_{PN} \\ x_{P+1,1} & & \cdots & & x_{P+1,N} \\ \cdots & \cdots & \cdots & \cdots & \cdots \\ x_{N1} & \cdots & \cdots & \cdots & x_{NN} \end{Vmatrix} \tag{1.1.14}$$

where $x_{11}=x_{12}=\cdots=x_{1N}=1$, and $x_{pn}=+1$ or -1, $(p=2, \cdots, N)$. Then we have

$$\sum_{n=1}^{N} x_{pn} = \begin{cases} N & \text{for } p=1 \\ 0 & \text{for } p=2, \cdots, N \end{cases} \tag{1.1.15-1}$$

$$\sum_{n=1}^{N} x_{pn} x_{qn} = \begin{cases} N & \text{for } p=q, \ (p, q=1, 2, \cdots, N) \\ 0 & \text{for } p \neq q, \ (p, q=1, 2, \cdots, N) \end{cases} \tag{1.1.15-2}$$

and

$$\sum_{p=1}^{N} x_{pn} x_{pm} = \begin{cases} N & \text{for } n=m \ (n, m=1, 2, \cdots, N) \\ 0 & \text{for } n \neq m \ (n, m=1, 2, \cdots, N). \end{cases} \tag{1.1.15-3}$$

Furthermore, the alias and orthogonal relations of $r(\geqq 3)$ rows can be defined by

$$\sum x_{p_1 n} x_{p_2 n} \cdots x_{p_r n} = \begin{cases} N, & \text{for } p_1, p_2, \cdots, p_r\text{-th rows are in the alias} \\ 0, & \text{for } p_1, p_2, \cdots, p_r\text{-th rows are in the orthogonal.} \end{cases} \tag{1.1.16}$$

Under these situation (refer to Kitagawa [15], [17], Moriguchi [20] and Mann [19]), we get the following

LEMMA 1 : (1) *We have*

$$\hat{\alpha}'_p = \alpha'_p + \frac{1}{N} \sum_{n=1}^{N} x_{pn} (v'_n + \dot{\varepsilon}_n), \tag{1.1.17-1}$$

$$e_n = (v'_n + \dot{\varepsilon}_n) - \sum_{p=1}^{P} x_{pn} \left(\frac{1}{N} \sum_{m=1}^{N} x_{pm} (v'_m + \dot{\varepsilon}_m) \right) \tag{1.1.17-2}$$

and

(1.1.17–3) $$\sum_{n=1}^{N} e_n^2 = N \sum_{p=P+1}^{N} \left(\frac{1}{N}\sum_{n=1}^{N} x_{pn}\,(v_n' + \dot{\varepsilon}_n)\right)^2.$$

(2) $\frac{N}{\sigma_2^2}(\hat{\alpha}_p')^2$ *and* $\frac{1}{\sigma_2^2}\sum_{n=1}^{N} e_n^2$ *are mutually independently distributed according to the non-central chi-square distribution with non-central parameters*

(1.1.18–1) $$\lambda_{1p} = \frac{N}{2\sigma_2^2}\,(\alpha_p' + V_p')^2$$

(1.1.18–2) $$\lambda_2 = \frac{N}{2\sigma_2^2}\sum_{p=P+1}^{N} (V_p')^2$$

and degrees of freedom $\phi_1 = 1$, $\phi_2 = N-P$, *respectively, where we put* $V_p' = \frac{1}{N}\sum_{n=1}^{N} x_{pn} v_n'$.

PROOF: (1) From the definitions of the estimates, we get

$$\hat{\alpha}_p' = \frac{1}{N}\sum_{n=1}^{N} x_{pn} y_n$$
$$= \alpha_p' + \frac{1}{N}\sum_{n=1}^{N} x_{pn}\,(v_n' + \dot{\varepsilon}_n)\ ,$$

and

$$e_n = y_n - \sum_{p=1}^{P} \hat{\alpha}_p'\, x_{pn}$$
$$= (v_n' + \dot{\varepsilon}_n) - \sum_{p=1}^{P} x_{pn}\left(\frac{1}{N}\sum_{m=1}^{N} x_{pm}\,(v_m' + \dot{\varepsilon}_m)\right)\ .$$

Furthermore, we get

$$\sum_{n=1}^{N} e_n^2 = \sum_{n=1}^{N}\left[v_n' + \dot{\varepsilon}_n - \sum_{p=1}^{P} x_{pn}\ \left\{\frac{1}{N}\sum_{m=1}^{N} x_{pm}(v_m' + \dot{\varepsilon}_m)\right\}\right]^2$$
$$= N \sum_{p=P+1}^{N}\left(\frac{1}{N}\sum_{m=1}^{N} x_{pm}(v_m' + \dot{\varepsilon}_m)\right)^2\ ,$$

where the 2nd expression is reduced to the relation

$$\sum_{n=1}^{N}\left(\sum_{p=1}^{N} x_{pn} X_p\right)^2 = \sum_{p=1}^{N}\sum_{n=1}^{N}(x_{pn}X_p)^2 + \sum_{p}^{\neq}\sum_{n=1}^{N} x_{pn}\, x_{qn} X_p X_q$$
$$= N\sum_{p=1}^{N} X_p^2\ ,$$
$$X_p \overset{d}{=} \frac{1}{N}\sum_{n=1}^{N} x_{pn}(v_n' + \dot{\varepsilon}_n)\ .$$

(2) Since the random variables $\dot{\varepsilon}_1, \dot{\varepsilon}_2, \cdots, \dot{\varepsilon}_{N-1}$ and $\dot{\varepsilon}_N$ are mutually independently distributed according to the normal distribution with mean zero

and common unknown variance σ_2^2, the estimate $\hat{\alpha}'_p$ is normally distributed with mean $E(\hat{\alpha}'_p)=\alpha'_p+V'_p$ and variance $\sigma^2(\hat{\alpha}'_p)=\sigma_2^2/N$.

Consequently, we can easily obtain the result (2). The non-central parameters are easily obtained by

$$\lambda_{1p}=\frac{1}{2}\left\{\frac{N}{\sigma_2^2}E\{(\hat{\alpha}'_p)^2\}-1\right\}$$

and

$$\lambda_2=\frac{N}{2}\left\{\frac{1}{\sigma_2^2}E(\sum e_n^2)-(N-P)\right\}.$$

1.1.3 Sampling theory from the normal populations

On the other hand, we shall consider the distribution function under the following assumptions.

ASSUMPTION: (1) The 2nd kind of the random variables

$$\dot{r}'_n \overset{d}{=} \sum_{r=1}^{R}\beta'_r\xi_{rn} \qquad (n=1,\ 2,\cdots,\ N), \tag{1.1.19}$$

where dotted notation is used to emphasize the random variable, in the model $y_n=\sum\alpha'_p x_{pn}+\dot{v}'_n+\dot{\varepsilon}_n$, $(n=1,\ 2,\ \cdots,\ N)$, are independently distributed according to the normal distribution function with mean zero and variance σ_1^2.

(2) The sums of random variables of these two kinds

$$\dot{k}_n \overset{d}{=} \dot{v}'_n+\dot{\varepsilon}_n \qquad (n=1,\ 2,\cdots,\ N) \tag{1.1.20}$$

are distributed according to the normal distribution with mean zero and variance $\sigma_k^2=\sigma_1^2+\sigma_2^2=\sigma_2^2(1+\mu_2)$, where $\mu_2=\sigma_1^2/\sigma_2^2$.

For the sake of simplicity, the standardized notations such as $\alpha_p \overset{d}{=} \alpha'_p/\sigma_2$, $\beta_r \overset{d}{=} \beta'_r/\sigma_2$, $v_{\pi(n)} \overset{d}{=} v_{\pi(n)}'/\sigma_2$ and $V_p \overset{d}{=} V'_p/\sigma_2$ may be used in the following discussions.

In these circumstances, we have

LEMMA 2: *The distribution functions of the following statistics are obtained as follows.*

(1) *The statistic*

$$\frac{2\lambda_{1p}}{\mu_2}=\frac{N}{\mu_2}\left(\alpha_p+\frac{1}{N}\sum_{n=1}^{N}x_{pn}\dot{v}_n\right)^2, \tag{1.1.21}$$

in which λ_{1p} is the non-central parameter of the non-central chi-square variate $K_{1p}^2=N\hat{\alpha}_p^2$ $(p=1,\ 2,\cdots,\ P)$ for an assigned set of given $\{\dot{v}_n\}$ $(n=1,\ 2,\cdots,\ N)$, is distributed by the distribution of $\dot{v}_n$ according to the non-central chi-square distribution with the non-central parameter

$$\tau_{1p}=\frac{N}{2\mu_2}\alpha_p^2, \qquad (p=1,\ 2,\cdots,\ P) \tag{1.1.22}$$

and degree of freedom 1.

(2) *The statistic*

$$(1.1.23)\qquad (\chi'_{1p})^2 = \frac{N}{\sigma_1^2+\sigma_2^2}(\hat{\alpha}'_p)^2 \qquad (p=1,\ 2,\cdots,\ P)$$

is distributed according to the non-central chi-square distribution with non-central parameter

$$(1.1.24)\qquad \tau_p = \frac{N}{2(\sigma_1^2+\sigma_2^2)}(\alpha'_p)^2 \qquad (p=1,\ 2,\cdots,\ P)$$

and degree of freedom 1.

(3) *The statistic*

$$(1.1.25)\qquad \frac{2\lambda_2}{\mu_2} = \frac{N}{\mu_2\sigma_2^2}\sum_{p=P+1}^{N}\left(\frac{1}{N}\sum_{n=1}^{N}x_{pn}\dot{v}_n\right)^2,$$

in which λ_2 *is the non-central parameter of the non-central chi-square variate* $K_2^2=\frac{1}{\sigma_2^2}\sum_{n=1}^{N}e_n^2$ *for a given* $\{\dot{v}_n\}$ $(n=1,\ 2,\cdots,\ N)$, *is distributed by the distribution of the sequence* $\{\dot{v}_n\}$ $(n=1,\ 2,\cdots,\ N)$ *according to the central chi-square distribution with degrees of freedom* $N-P$.

(4) *The statistic*

$$(1.1.26)\qquad \chi_2^2 = \frac{1}{\sigma_1^2+\sigma_2^2}\sum_{n=1}^{N}e_n^2$$

is distributed according to the central chi-square distributions with degrees of freedom $N-P$.

(5) *The statistic*

$$(1.1.27)\qquad F'_p \overset{d}{=} \frac{K_{1p}^2}{K_2^2}(N-P) = \frac{\chi_{1p}'^2}{\chi_2^2}(N-P)$$

is distributed according to the non-central F-distribution with non-central parameter

$$(1.1.28)\qquad \tau_p = \frac{N}{2(\sigma_1^2+\sigma_2^2)}(\alpha'_p)^2 = \frac{N}{2(1+\mu_2)}\alpha_p^2,$$

where $\frac{\alpha'_p}{\sigma_2}\overset{d}{=}\alpha_p$, *and pair of degrees of freedom* 1 *and* $N-P$.

PROOF: (1) From the assumption (1), we have $E_1\left(\frac{2\lambda_1}{\mu_2}\right)=\frac{N}{\mu_2}\alpha_p^2+1$, where the notation $E_1(\quad)$ means the expected value with respect to the normal variate $\dot{v}_n(n=1,\ 2,\cdots,\ N)$. Consequently we get (1).

(2) Under the assumption (2), we get $E\{\chi_{1p}'^2\}=\frac{N}{\sigma_1^2+\sigma_2^2}(\alpha'_p)^2+1$, where

$E\{\quad\}$ stands for the expectations with respect to the sums, which is also a normal variate with mean zero and variance $\sigma_1^2+\sigma_2^2$, of the normal variate $\dot{\varepsilon}_n$ and $\dot{v}_n'$ $(n=1, 2, \cdots, N)$.

(3) From the assumption (1) $E_1\left(\frac{2}{\mu_2}\lambda_2\right)=\frac{N}{\sigma_1^2}\sum_{p=P+1}^{N} E_1\{(\frac{1}{N}\sum x_{pn}\dot{v}_n')^2\}=N-P$, then (3) is easily obtained.

(4) is proved in a similar way to (2).

(5) From the assumption (2), the results (2) and (4) in this lemma, it can be obtained that

$$F_p'=\frac{K_{1p}^2(N-P)}{K_2^2}=\frac{N(N-P)}{\sigma_2^2}(\hat{\alpha}_p')^2\Big/\frac{N}{\sigma_2^2}\sum_{p=P+1}^{N}(\frac{1}{N}\sum x_{pn}\dot{k}_n')_2$$
$$=\frac{\chi_{1p}'^2(N-P)}{\chi_2^2}=\frac{N(N-P)}{\sigma_1^2+\sigma_2^2}(\hat{\alpha}_p')^2\Big/\frac{N}{\sigma_1^2+\sigma_2^2}\sum_{p=P+1}^{N}(\frac{1}{N}\sum x_{pn}\dot{k}_n')^2$$

is distributed according to the non-central F-distribution with non-central parameter $\tau_p=N\alpha_p'^2/2(\sigma_1^2+\sigma_2^2)$ and the pair of degrees of freedom 1 and $N-P$, in which τ_p is the non-central parameter of the variate $\chi_{1p}'^2$.

1.1.4 Random combined fractional factorial designs

Let us consider the problem in our RACOFFD, in which we have a design matrix

$$D=\begin{Vmatrix} D_P \\ D_R \end{Vmatrix},$$

where D_P is a submatrix defined in the Definition 1, and D_R is another submatrix defined by the following definition.

Definition 2: (1) Let

$$D_R=\begin{Vmatrix} \xi_{11} & \xi_{12} & \cdots & \xi_{1N} \\ \xi_{21} & \xi_{22} & \cdots & \xi_{2N} \\ \cdots & \cdots & \cdots & \cdots \\ \cdots & \cdots & \cdots & \cdots \\ \xi_{R1} & \xi_{R2} & \cdots & \xi_{RN} \end{Vmatrix}$$

is a submatrix of the complete two level $(N-1)\times N$ orthogonal array

$$\|\xi_{rn}\|=\begin{Vmatrix} \xi_{11} & \xi_{12} & \cdots & \xi_{1N} \\ \cdots & \cdots & \cdots & \cdots \\ \xi_{R1} & \xi_{R2} & \cdots & \xi_{RN} \\ \xi_{R+1,1} & \xi_{R+1,2} & \cdots & \xi_{R+1,N} \\ \cdots & \cdots & \cdots & \cdots \\ \cdots & \cdots & \cdots & \cdots \\ \xi_{N-1,1} & \xi_{N-1,2} & \cdots & \xi_{N-1,N} \end{Vmatrix}$$

which contains no row such that $\xi_{N1}=\cdots=\xi_{NN}=1$.

(2) The randomization procedure in our RACOFFD is defined as follows.

A) With equal probability $1/N!$, we choose a permutation

$$\Pi = \begin{pmatrix} 1 & 2 & \cdots & N \\ \pi(1) & \pi(2) & \cdots & \pi(N) \end{pmatrix} \tag{1.1.29}$$

from the set of all possible permutations of N numbers $1, 2, \cdots, N-1$ and N.

B) To each permutation Π, we define the design matrix

$$D = \begin{Vmatrix} x_{11} & x_{12} & \cdots & x_{1N} \\ x_{21} & x_{22} & \cdots & x_{2N} \\ \cdots & \cdots & \cdots & \cdots \\ x_{P1} & x_{P2} & \cdots & x_{PN} \\ \xi_{1\pi(1)} & \xi_{1\pi(2)} & \cdots & \xi_{1\pi(N)} \\ \cdots & \cdots & \cdots & \cdots \\ \xi_{R\pi(1)} & \xi_{R\pi(2)} & & \xi_{R\pi(N)} \end{Vmatrix} . \tag{1.1.30}$$

By virtue of these definitions of the design matrix, we get a random variable

$$\dot{v}_{\pi(n)} = \sum_{r=1}^{R} \beta_r \xi_{r\pi(n)} , \qquad n=1, 2, \cdots, N, \tag{1.1.31}$$

in our mathematical model of the observed value

$$y_n = \sum_{p=1}^{P} \gamma_p x_{pn} + \sigma_2 \dot{v}_{\pi(n)} + \dot{\varepsilon}_n, \qquad n=1, 2, \cdots, N.$$

It must be noticed that the variable $v_{\pi(n)}$ for a particular n $(1 \leq n \leq N)$ is fluctuated by the above randomization procedure, but the sequence of $v_{\pi(n)}$, $\{v_{\pi(1)}, v_{\pi(2)}, \cdots, v_{\pi(N)}\}$, is a finite set under the RACOFFD situation, in which a random sampled matrix from the matrices permuted N columns of a pre-randomized matrix

$$D_R = \begin{Vmatrix} \xi_{11} & \cdots & \cdots & \xi_{1N} \\ \xi_{21} & \cdots & \cdots & \xi_{2N} \\ \cdots & \cdots & \cdots & \cdots \\ \xi_{R1} & \cdots & \cdots & \xi_{RN} \end{Vmatrix} ,$$

which is sampled matrix with R rows from the complete $N-1$ rows and N columns O.A., is used as a sub-matrix in the design matrix.

From these discussions we get the mathematical problem in our RACOFFD situation as follows.

(1) The distribution function of $\dot{V}_p = \frac{1}{N} \sum_{n=1}^{N} x_{pn} \dot{v}_{\pi(n)}$ and its asymptotic property.

(2) The joint distribution function of $\{\dot{V}_1, \dot{V}_2, \cdots, \dot{V}_\Phi\}$, $(\Phi < N)$, and its asymptotic property.

1.2 Power function in our testing hypothesis

1.2.1 Asymptotic sampling distribution from finite population

In virtue of Lemma 2, we can evaluate the power of test with respect to a null hypothesis

$$H_0 : \alpha'_p = 0 \tag{1.2.1}$$

for a single $p(1 \leqq p \leqq P)$ by appealing to the statistic F_p defined by

$$F_p = \frac{N(N-P)(\hat{\alpha}'_p)^2}{\sum_{n=1}^{N} e_n^2} \tag{1.2.2}$$

which is distributed exactly according to F–distribution with the pair of degrees of freedom $[1, N-P]$ under the conditions, such that

(1) $\alpha_p = 0$,

(2) $\dot{v}_{\pi(1)}, \dot{v}_{\pi(2)}, \cdots, \dot{v}_{\pi(N)}$ are mutually independently distributed according to the normal distribution with mean zero and common variance $\mu_2 = \sigma_1^2/\sigma_2^2$,

(3) $\dot{\varepsilon}_1, \cdots, \dot{\varepsilon}_N$ and $\dot{v}_{\pi(1)}, \cdots, \dot{v}_{\pi(N)}$ are mutually independently distributed.

On the other hand, we have the sequence $\{v_{\pi(1)}, v_{\pi(2)}, \cdots, v_{\pi(N)}\}$ in our RACOFFD situation as a finite population in which the elements are permuted by the prescribed randomization procedure in the random combination of two fractional factorial designs. In these circumstances, the 2nd condition is unsatisfied.

Henceforth, we are concerned with the asymptotic property of the sampling distribution from the finite population which is defined by the following several properties.

DEFINITION 3: (1) The finite population is classified into $K(<N)$ classes such that NP_1 elements of $\bar{v}_1$, NP_2 elements of $\bar{v}_2, \cdots, NP_{K-1}$ elements of $\bar{v}_{K-1}$ and NP_K elements of $\bar{v}_K$ where $\bar{v}_k$ $(k=1, 2, \cdots, K)$ is the values of $v_{\pi(n)}$ in the k–th class.

(2) The random variables

$$\dot{u}_{k1} \overset{d}{=} \dot{u}_{k\underbrace{1\cdots1}_{J_1}}, \quad \dot{u}_{k2} \overset{d}{=} \dot{u}_{k\underbrace{1\cdots2}_{J_1}}, \quad \cdots, \quad \dot{u}_{kM} \overset{d}{=} \dot{u}_{k\underbrace{2\cdots2}_{J_1}}$$

where the suffix "k" stands for the kth class, the 2nd suffix 1 or 2 stands for the $\{+1$ or $-1\}$ in the lst classification into two classes, the 3rd one 1 or 2 means also $\{+1$ or $-1\}$ in the 2nd classification into two classes, and so on, can be defined by the 2^{J_1} $(=M<N)$ ways as random classification of the sequence $\{v_{\pi(n)}\}$ $(n=1, 2, \cdots, N)$ by the random combination of $x_{\phi n}$ $(\phi=1, 2, \cdots, M;\ n=1, 2, \cdots, N)$ which is a sub-matrix of the complete $N \times N$ orthogonal array.

In these circumstances, for any assigned set of

$$b_{k\mu}=\begin{vmatrix} b_{11} & b_{12} & \cdots & b_{1M} \\ b_{21} & b_{22} & \cdots & b_{2M} \\ \cdots & \cdots & \cdots & \cdots \\ \cdots & \cdots & \cdots & \cdots \\ b_{K1} & b_{K2} & \cdots & b_{KM} \end{vmatrix},$$

in which $b_{k\mu}=0, 1, 2, \cdots, 2NP_kM^{-1}$, the joint probability distribution function of the set of the statistics

$$\dot{u}_{k\mu}=\begin{vmatrix} \dot{u}_{11} & \dot{u}_{12} & \cdots & \dot{u}_{1M} \\ \dot{u}_{21} & \dot{u}_{22} & \cdots & \dot{u}_{2M} \\ \cdots & \cdots & \cdots & \cdots \\ \cdots & \cdots & \cdots & \cdots \\ \dot{u}_{K1} & \dot{u}_{K2} & \cdots & \dot{u}_{KM} \end{vmatrix},$$

is given by

$$P\{\Pi\Pi(\dot{u}_{k\mu}=b_{k\mu})\} = \prod_{k=1}^{K} \frac{NP_k!}{\prod_{\mu=1}^{M} b_{k\mu}!} \Big/ \frac{N!}{\left(\frac{N}{M}!\right)^M}. \tag{1.2.3}$$

Consequently, we get

THEOREM A: *For any assigned set of*

$$b_{k\mu}=\begin{matrix} b_{11} & b_{12} & \cdots & b_{1M} \\ b_{21} & b_{22} & \cdots & b_{2M} \\ \cdots & \cdots & \cdots & \cdots \\ \cdots & \cdots & \cdots & \cdots \\ b_{K1} & b_{K2} & \cdots & b_{KM} \end{matrix} \tag{1.2.4}$$

in which $b_{k\mu}=0, 1, 2, \cdots, 2NP_kM^{-1}$, *the joint probability distribution function of the set of the statistics*

$$\dot{u}_{k\mu}=\begin{matrix} \dot{u}_{11} & \dot{u}_{12} & \cdots & \dot{u}_{1M} \\ \dot{u}_{21} & \dot{u}_{22} & \cdots & \dot{u}_{2M} \\ \cdots & \cdots & \cdots & \cdots \\ \cdots & \cdots & \cdots & \cdots \\ \dot{u}_{K1} & \dot{u}_{K2} & \cdots & \dot{u}_{KM} \end{matrix} \tag{1.2.5}$$

is given by

$$P\{\Pi\Pi(\dot{u}_{k\mu}=b_{k\mu})\}=C\ exp\{-\sum_k\sum_\mu \frac{NP_k}{2M}B_{k\mu}^2+\varepsilon_1'+\varepsilon_2'\} \tag{1.2.6}$$

where

$$C=M^{\frac{M(K-1)}{2}} \Big/ (2\pi N)^{\frac{(K-1)(M-1)}{2}}\left(\prod_{k=1}^{K}P_k\right)^{\frac{M-1}{2}} \tag{1.2.7-1}$$

(1.2.7–2) $$\varepsilon_1' = \frac{1}{12N}\left\{\sum_k \frac{1}{P_k}\left(1-\sum_\mu \frac{M}{1+B_{k\mu}}\right)+(M^2-1)\right\}+O(N^{-\frac{3}{2}})$$

(1.2.7–3) $$\varepsilon_2' = -\frac{1}{6M}\sum_k\sum_\mu NP_k B_{k\mu}^3+\sum_k\sum_\mu\left\{\frac{NP_k}{12M}B_{k\mu}^4-\frac{1}{4}B_{k\mu}^2\right\}+O(N^{-\frac{3}{2}}),$$

where

(1.2.7–4) $$B_{k\mu} \overset{d}{=} \frac{M}{NP_k}b_{k\mu}-1 .$$

1.2.2 The power function

As we have seen in the previous section, we have proposed the ordinary test of hypothesis H_0: $\alpha_p' = 0$ by ordinary method of F–test, in our RACOFFD situation. In these circumstances, we have following two kinds of error.

(i) The lst kind of error by which we reject the null hypothesis for a particular p in $1 \leqq p \leqq P$, when it is true, is given by Q_1.

(ii) The 2nd kind of error by which we accept for a particular p in $1 \leqq p \leqq P$, when $\alpha_p' \neq 0$, is given by $Q_{2p} = Q(\tau_{1p}, \Phi, \alpha_0)$.

In virtue of Lemma 1, Lemma 2 and Theorem A, the lst kind of error Q_1 is equal to α_0 under the asymptotic situation such that $\varepsilon'' = \varepsilon_1' + \varepsilon_2' \simeq 0$ as we have evaluated in the previous section.

On the other hand, even if in the case that the condition $\varepsilon'' \simeq 0$ is satisfied, the 2nd kind of error is changed with the change in the parameters τ_p, Φ and α_0. The lst one of these is $\tau_p = N\alpha_p^2/2\,(1+\mu_2)$ where N is the size of experiments, $(\alpha_p^2 = \alpha_p'/\sigma_2)^2$ is the normalized size of the unknown parameter and $\mu_2 = \frac{1}{\sigma_2^2}\left(\frac{1}{N}\sum_{n=1}^{N} v'^2_{\pi(n)}\right) = \sum_{r=1}^{R}\left(\frac{\beta_r'}{\sigma_2}\right)^2$ is the normalized sum of the unknown noisy parameters $\beta_1', \beta_2', \cdots, \beta_R'$. The 2nd one is the degrees of freedom of estimate of error term, and the 3rd is the size of test with respect to the null hypothesis H_0.

Let us consider the practical meanings of these parameters in our RACOFFD methods. The mathematical model

(1.2.8) $$\zeta(x_1, \cdots, x_P;\ \xi_1, \cdots, \xi_R) = \left\{\sum_{P=1}^{P}\alpha_p x_p + \sum_{r=1}^{R}\beta_r\xi_r\right\},$$

which is set up as a priori assumption by an experimenter, is an abstract model of his objective worlds. In our RACOFFD method, the experimenter decomposes this model in such a way that

(1.2.9) $$\zeta(x_1, \cdots, x_P;\ \xi_1, \cdots, \xi_R) = \left\{\sum_{p=1}^{P}\alpha_p x_p\right\} + \left\{\sum_{r=1}^{R}\beta_r\xi_r\right\} .$$

He then assigns the lst term $\{\sum\alpha_p x_p\}$ of this decomposed model to an O.A. and the 2nd one $\{\sum\beta_r\xi_r\}$ to the other O.A. respectively. The parameters

α_p^2 and $\mu_2=\sum_{r=1}^{R}\beta_r^2$ are determined by these abstract objective world, ζ $(x_1, \cdots, x_P; \xi_1, \cdots, \xi_R)$.

In order to explore the objective world, the experimenter may decide a strategy which is composed of the parameters such as, the size of experiments N, the degrees of freedom Φ, the size of testing hypothesis α_0 and the decomposition rule into 2 groups of factors.

On the other hand, according to the original papers by Satterthwaite [25], Budne [9] and Anscombe [1], it can be seen that the random balance experimentation is useful for a kind of "screening experiments". We also recognize surely that the procedure of the method of exploring the objective worlds should contain the successive inferences after the preliminary test of the present hypothesis H_0. That is to say, our procedure should be completely established under an assumption in which the 2nd process of statistical inference is performed under by the corrected model

$$\zeta_{\mathrm{II}}(Z_1, \cdots, Z_Q) = \sum_{q=1}^{Q}\beta_q z_q \tag{1.2.10}$$

where $z_1, z_2, \cdots, z_Q$ are factors selected by test by which the non-significant factors are screened out in the 1st step of our RACOFFD method. Consequently, we shall concern to the sum of the 1st and the 2nd kinds of error $Q_1+Q_{2p}=Q$. In these circumstances, we have the concept of the borderline test concerning the preliminary test before the final test as given by Paull [22], Bozivich, Bancroft and Hartley [7] and Kitagawa [16].

On the other hand, we have Patnaik approximation (refer to Patnaik [21] and Kitagawa [15]) of the non-central F-distribution such that the non-central F-variate F' with non-central parameter τ_p and pair of degrees of freedom (1 and Φ) can be approximated by the central (F'/k)-variate with pair of degrees of freedom (ν and Φ), where

$$k=1+2\tau_p \tag{1.2.11}$$

and

$$\nu=\frac{(1+2\tau_p)^2}{1+4\tau_p}\ . \tag{1.2.12}$$

Consequently, we can evaluate easily the power of test in the RACOFFD testing hypothesis H_0 by the tables of incomplete beta-function (Pearson [23]),

$$P_r(F'<F_{\Phi}^{1}(\alpha_0)) \doteqdot 1-I_{x_0}\left(\frac{\nu}{2}\ ,\ \frac{\Phi}{2}\right)\ , \tag{1.2.13}$$

where $F_{\Phi}^{1}(\alpha_0)$ is 100 α_0 percent point of the F-distribution with pair of degrees of freedom $[1, \Phi]$ and $I_{x_0}(\nu/2\ ,\ \Phi/2)$ is the incomplete beta ratio such that

$$I_{x_0}\left(\frac{\nu}{2}, \frac{\Phi}{2}\right)=\frac{\int_1^{x_0}\theta^{\frac{\nu}{2}-1}(1-\theta)^{\frac{\Phi}{2}-1}d\theta}{\int_0^1\theta^{\frac{\nu}{2}-1}(1-\theta)^{\frac{\Phi}{2}-1}d\theta},$$

in which $x_0=aF'_\Phi(\alpha_0)/(\Phi+aF'_\Phi(\alpha_0))$ and $a=\nu k^{-1}=(1+2\tau_p)/(1+4\tau_p)$.

The following figures show the 1st and 2nd kinds of error in our RACOFFD test of H_0 under the asymptotic situations. In these figures, the increasing and decreasing curves correspond to the 1st and 2nd kinds of error, respectively.

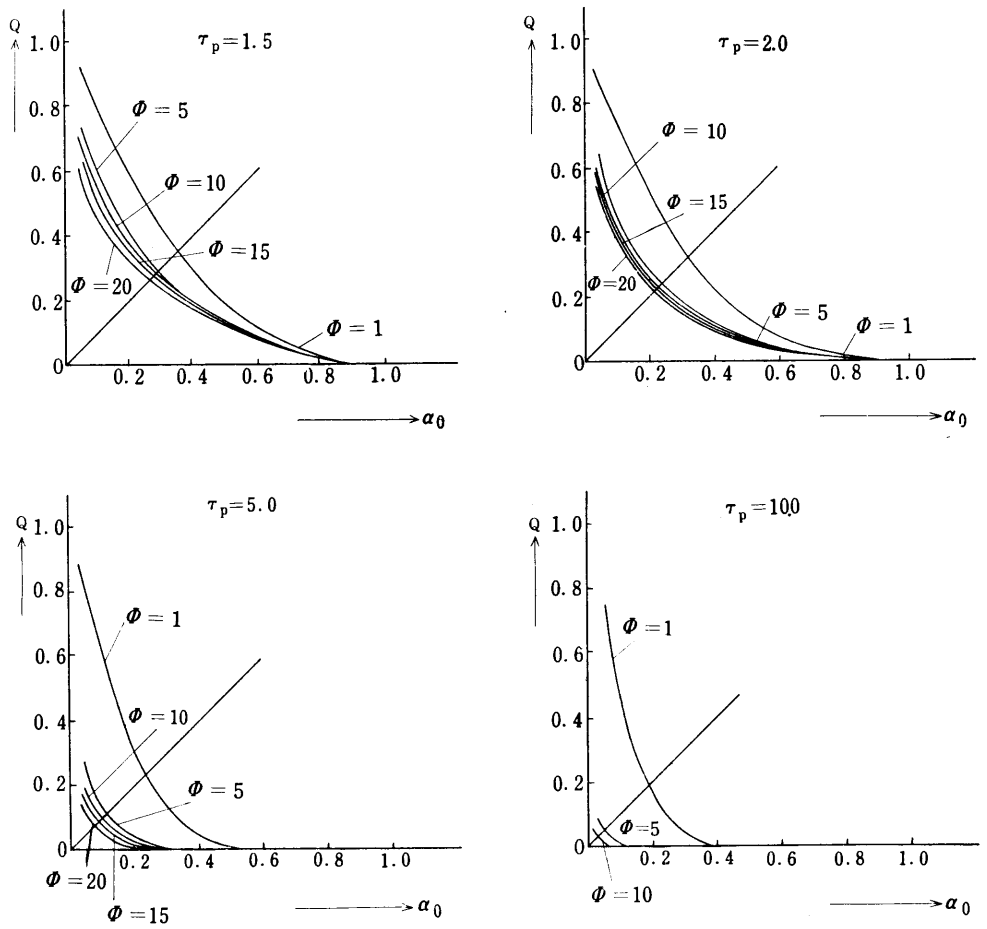

FIG. 1.2.1 1st and 2nd kinds of error

From these figures, it can be observed that the sums of these two kinds of error, in the condition that $\tau_p=5\sim10$ and $\Phi=5\sim10$, $Q=Q_1+Q_{2p}$ are minimized by controlling α_0 the range from 0.10 to 0.30.

Furthermore, we get the optimal size of the experiments $N=2\tau_p(1+\mu_2)/\alpha_p^2$, as follows.

TABLE 1.2.1 optimal size of experiments in our RACOFFD

$1+\frac{\mu_2}{\alpha_p^2}$ \ τ_p	2.0	5.0	10.0
2.0	8	20	40
3.0	12	30	60
4.0	16	40	80
5.0	20	50	100

1.3 Properties of the estimates

1.3.1 Moments of λ_{1p} and λ_2

The non-central parameters

(1.3.1–1) $$\lambda_{1p}=\frac{N}{2\sigma_2^2}(\alpha_p'+V_p')^2$$

and

(1.3.1–2) $$\lambda_2=\frac{N}{2\sigma_2^2}\sum_{p=P+1}^{N}(V_p')^2$$

of the statistics

(1.3.2–1) $$K_{1p}=\frac{N}{\sigma_2^2}(\hat{\alpha}_p')^2$$

and

(1.3.2–2) $$K_2=\frac{1}{\sigma_2^2}\sum_{n=1}^{N}e_n^2$$

contain the random variables $\dot{V}_p$, $\dot{V}_{P+1}$, $\dot{V}_{P+2}$, $\cdots$, V_N each of which has a sampling distribution function from the finite population $v_1, v_2, \cdots, v_N$ by the randomization procedure in our RACOFFD situation.

So as to study the properties of estimates $\hat{\alpha}_p$ and $\sum_{n=1}^{N} e_n^2$, we shall discuss the asymptotic behavior of these moments of λ_{1p} and λ_2. The sampling moments of a statistic from a finite population can be obtained by a method due to Tukey [32], [33] and elaborated by R. Hooke [12], [13]. In this paper, a slightly extended method, which is constructed by the following lemmas concerning to the sampling moments of a finite population, is applied.

First of all, we shall give

DEFINITION 4 : A $(a+b+\cdots+i)$ th degree generalized symmetric function of two way array $\|z_{\phi n}\|$ $(\phi=1, 2, \cdots, \Phi;\ n=1, 2, \cdots, N)$ is defined by

(1.3.3)
$$\begin{matrix} ① \\ \vdots \\ (\Phi) \end{matrix} \begin{pmatrix} a & b & \cdots & e \\ \cdots & \cdots & \cdots & \cdots \\ f & g & \cdots & i \end{pmatrix} = \sum_n^{\neq} z^a_{1n_1} \cdots z^i_{\Phi n_m}$$

where $\sum_n^{\neq}$ stands for the distinct sum, as a column generalized symmetric function, which will be abbreviated by c. g. s. f. here-after.

In the similar way a column generalized symmetric mean, which will be abbreviated by c. g. s. m., is defined by

(1.3.4)
$$\begin{matrix} ① \\ \vdots \\ \vdots \\ \vdots \\ (\Phi) \end{matrix} \begin{pmatrix} a & b & \cdots & c \\ \cdots & \cdots & \cdots & \cdots \\ \cdots & \cdots & \cdots & \cdots \\ \cdots & \cdots & \cdots & \cdots \\ f & g & \cdots & i \end{pmatrix} = \sum_n^{\neq} z^a_{1n_1} \cdots z^i_{\Phi n_m} / N^{(m)} ,$$

where $N^{(m)} = N \cdot (N-1) \cdots (N-m+1)$. Then we get

LEMMA 3 : *The product of 2 c. g. s. f. 's* $(\varphi_1 \times \nu_1)_c$ *and* $(\varphi_2 \times \nu_2)_c$, *which are* φ_1 *rows,* ν_1 *columns and* φ_2 *rows,* $\nu_2 (\leqq \nu_1)$ *columns c. g. s. f. 's, respectively, is given by*

(1.3.5)
$$\begin{matrix} ① \\ ② \\ \vdots \\ (\varphi_1) \end{matrix} \left(\boxed{\varphi_1 + \nu_1} \right)_c \quad \begin{matrix} (\varphi_1 + 1) \\ \vdots \\ (\varphi_1 + \varphi_2) \end{matrix} \left(\boxed{\varphi_2 + \nu_2} \right)_c$$

$$= \sum{}' \begin{matrix} ① \\ \vdots \\ (\varphi_1 + \varphi_2) \end{matrix} \Big((\varphi_1 + \varphi_2) \times \nu_1 \Big)_c + \sum{}'' \begin{matrix} ① \\ \vdots \\ (\varphi_1 + \varphi_2) \end{matrix} \Big((\varphi_1 + \varphi_2) \times (\nu_1 + 1) \Big)_c$$

$$+ \sum{}''' \begin{matrix} ① \\ \vdots \\ (\varphi_1 + \varphi_2) \end{matrix} \Big(((\varphi_1 + \varphi_2) \times (\nu_1 + 2) \Big)_c + \cdots + \begin{matrix} ① \\ \vdots \\ (\varphi_1 + \varphi_2) \end{matrix} \Big(\boxed{\varphi_1 \times \nu_1} \quad \boxed{\varphi_2 \times \nu_2} \Big)_c$$

where the following remarks should be considered.

(i) *The 1st summation* $\sum'$ *stands for the summation over all possible* $(\varphi_1 + \varphi_2)$ *rows and* ν_1 *columns g. s. f. 's, which are generated by the combination of* ν_2 *in the* ν_1 *positions and permutations of* ν_2 *numbers.*

(ii) *The 2nd summation* $\sum''$ *stands for the summation over all possible* $\varphi_1 + \varphi_2$ *rows and* $\nu_1 + 1$ *columns g. s. f. 's, which are generated by the rule that the* $\nu_1 + 1$ *th column is chosen from the possible* ν_2 *columns and* $\nu_2 - 1$ *possible columns are allocated in the possible* ν_1

columns in $\binom{\nu_1}{\nu_2-1}$ *times and* ν_2-1 *columns permute each other all in possible* $(\nu_2-1)!$ *permutations.*

(iii) *The 3rd summation* $\sum'''$ *stands for summation over all possible* $\varphi_1+\varphi_2$ *rows and* ν_1+2 *columns g. s. f. 's, which are generated by the rule that the possible* $(\nu_1+1)th$ *and* $(\nu_1+2)th$ *columns are chosen from the possible columns in* $\binom{\nu_2}{2}$ *times and* ν_2-2 *possible columns are allocated in the possible* ν_1 *columns in* $\binom{\nu_1}{\nu_2-2}$ *times and* ν_2-2 *columns permute each other in all possible* $(\nu_2-2)!$ *permutations.*

(iv) *In the similar way, the successive c. g. s. f. 's are generated to the term having* $\nu_1+\nu_2-1$ *columns.*

(v) *The last term is obviously*

$$\begin{array}{c} 1 \\ \vdots \\ (\varphi_1+\varphi_2) \end{array} \left(\begin{array}{cc} \boxed{\varphi_1\times\nu_1} & \\ & \boxed{\varphi_2\times\nu_2} \end{array} \right) c$$

in which all columns of 2nd c. g. s. f. are pushed out.

In the same way with those of formulas (2.2.8) and (2.2.9) in the succeeding paper [34], the proof of this lemma can be done.

Furthermore, we shall give

DEFINITION 5: (1) Let us define the random pairings of a set of N vectors $Z_1=(z_{11},\cdots,z_{\phi 1}),\cdots,Z_N=(z_{1N},\cdots,z_{\phi N})$ and a set of N numbers $v_{\pi(1)}$, $v_{\pi(2)},\cdots,v_{\pi(N)}$ such that $\begin{pmatrix} Z_1, & Z_2, & \cdots, & Z_N \\ v_{\pi(1)}, & v_{\pi(2)}, & \cdots, & v_{\pi(N)} \end{pmatrix}$, where $\{\pi(n)\}$ $(n=1,2,\cdots,N)$ is a permutation $\Pi=\begin{pmatrix} 1 & 2 & \cdots & N \\ \pi(1) & \pi(2) & \cdots & \pi(N) \end{pmatrix}$, which is chosen from the possible $N!$ permutations of N numbers with equal probability $1/N!$.

(2) Let us define a multiplicative random pairing

$$Z_{\phi n}=z_{\phi n}\, v_{\pi(n)} \tag{1.3.6}$$

and generalized symmetric means, which will be abbreviated as g. s. m., in the sense given by R. Hooke [12]

$$\begin{bmatrix} a & b & \cdots & \cdots & e \\ \cdots & \cdots & \cdots & \cdots & \cdots \\ \cdots & \cdots & \cdots & \cdots & \cdots \\ f & g & \cdots & \cdots & i \end{bmatrix} = \sum_{\phi}^{\neq}\sum_{n}^{\neq} Z^{a}_{\phi_1 n_1}\cdots Z^{i}_{\phi_s n_\nu}/\Phi^{(s)}N^{(\nu)}. \tag{1.3.7}$$

Consequently we get

LEMMA 4: *The averaging over all possible g. s. m. is given by*

$$\text{(1.3.8)} \qquad \text{aver} \begin{bmatrix} a\ b\ \cdots\ e \\ \cdots\cdots\cdots\cdots \\ \cdots\cdots\cdots\cdots \\ f\ g\ \cdots\ i \end{bmatrix} \overset{d}{=} \begin{bmatrix} a\ b\ \cdots\ e \\ \cdots\cdots\cdots\cdots \\ \cdots\cdots\cdots\cdots \\ f\ g\ \cdots\ i \end{bmatrix}$$

$$= \begin{bmatrix} a\ b\ \cdots\ e \\ \cdots\cdots\cdots\cdots \\ \cdots\cdots\cdots\cdots \\ f\ g\ \cdots\ i \end{bmatrix}^{*} \overset{**}{<a+\cdots+f, \cdots, e+\cdots+i>} ,$$

where the square bracket with one asterisk $[\quad]^{*}$ *means the g. s. m. of* $z_{\phi n}$ *and the angle bracket with two asterisk* $<\ >^{**}$ *means the symmetric mean of* $v_{\pi(n)}$.

The proof of this Lemma is given in the succeeding paper [34].

COLLORARY OF LEMMA 4: *The averaging over all c. g. s. m.*

$$\begin{matrix} (\phi_1) \\ \vdots \\ (\phi_s) \end{matrix} \begin{bmatrix} a\ b\ \cdots\ e \\ \cdots\cdots\cdots\cdots \\ \cdots\cdots\cdots\cdots \\ f\ g\ \cdots\ i \end{bmatrix}_{c} = \sum_{n}^{\neq} Z^{a}_{\phi_1 n_1} \cdots\cdots Z^{i}_{\phi_s n_\nu} / N^{(\nu)}$$

is given by

$$\text{(1.3.9)} \qquad \text{aver} \begin{matrix} (\phi_1) \\ \vdots \\ (\phi_s) \end{matrix} \begin{bmatrix} a\ b\ \cdots\ e \\ \cdots\cdots\cdots\cdots \\ \cdots\cdots\cdots\cdots \\ f\ g\ \cdots\ i \end{bmatrix} \overset{d}{=} \left[\begin{matrix} (\phi_1) \\ \vdots \\ (\phi_s) \end{matrix} \begin{bmatrix} a\ b\ \cdots\ e \\ \cdots\cdots\cdots\cdots \\ \cdots\cdots\cdots\cdots \\ f\ g\ \cdots\ i \end{bmatrix}_{c} \right]$$

$$= \begin{matrix} (\phi_1) \\ \vdots \\ (\phi_s) \end{matrix} \begin{bmatrix} a\ b\ \cdots\ e \\ \cdots\cdots\cdots\cdots \\ \cdots\cdots\cdots\cdots \\ f\ g\ \cdots\ i \end{bmatrix}^{*}_{c} <a+\cdots+f, \cdots, e+\cdots+i>^{**}.$$

The proof of this Collorary of Lemma 4 is given in the succeeding paper [34].

In virtue of these lemmas, and some calculations in the succeeding paper, we get

THEOREM B–1: *The moments of* λ_{1p} *are as follows:*

$$\text{(1.3.10–1)} \qquad \text{aver } \lambda_{1p} = \frac{\mu_2}{2}\{2\tau_{1p}+1\} + \Delta_{1p} + O(N^{-2})$$

$$\text{(1.3.10–2)} \qquad \text{aver } \lambda^2_{1p} = \left(\frac{\mu_2}{2}\right)^2 \{4\tau^2_{1p}+12\tau_{1p}+3\} + \Delta_{2p} + O(N^{-2})$$

(1.3.10–3) $$\text{aver } \lambda_{1p}^3=\left(\frac{\mu_2}{2}\right)^3\{8\tau_{1p}^3+60\tau_{1p}^2+90\tau_{1p}+15\}+\Delta_{3p}+O(N^{-2}),$$

and

(1.3.10–4) $$\text{aver } \lambda_{1p}^4=\left(\frac{\mu_2}{2}\right)^4\{16\tau_{1p}^4+224\tau_{1p}^3+840\tau_{1p}^2+840\tau_{1p}+105\}$$
$$+\Delta_{4p}+O(N^{-2})$$

where

(1.3.11) $$\tau_{1p}=\frac{N\alpha_p^2}{2\mu_2}$$

(1.3.12–1) $$\Delta_{1p}=\left(\frac{\mu_2}{2}\right)\frac{1}{N}$$

(1.3.12–2) $$\Delta_{2p}=\left(\frac{\mu_2}{2}\right)^2(12\tau_{1p}-2\delta_2+6)\frac{1}{N}$$

(1.3.12–3) $$\Delta_{3p}=\left(\frac{\mu_2}{2}\right)^3\left\{60\tau_{1p}^2-\left(\frac{180}{3}\delta_2-180\right)\tau_{1p}-(30\delta_2-45)\right\}\frac{1}{N}$$

and

(1.3.12–4) $$\Delta_{4p}=\left(\frac{\mu_2}{2}\right)^4\left[224\tau_{1p}^3-\left\{840\left(\frac{2}{3}\delta_2-2\right)\tau_{1p}^2\right.\right.$$
$$\left.\left.+840(2\delta_2-3)\tau_{1p}+420(\delta_2-1)\right\}\right]\frac{1}{N}$$

in which $\delta_2\overset{d}{=}\frac{\mu_4}{\mu_2^2}$.

In general, the S $(<\infty)$ *th moment of* λ_{1p} *is*

(1.3.13) $$\text{aver } \lambda_{1p}^S=\left(\frac{\mu_2}{2}\right)^S\left\{(2\tau_{1p})^S+\sum_{s=1}^{S}\prod_{r=1}^{s}(2r-1)\binom{2S}{2s}(2\tau_{1p})^{S-s}\right\}$$
$$+O(N^{-1}).$$

THEOREM B–2: *The moments of* λ_2 *are as follows:*

(1.3.14–1) $$\text{aver } \lambda_2=\left(\frac{\mu_2}{2}\right)\Phi+\Delta_1+O(N^{-2})$$

(1.3.14–2) $$\text{aver } \lambda_2^2=\left(\frac{\mu_2}{2}\right)^2\{3\Phi+\Phi^{(2)}\}+\Delta_2+O(N^{-2})$$

(1.3.14–3) $$\text{aver } \lambda_2^3=\left(\frac{\mu_2}{2}\right)^3\{15\Phi+9\Phi^{(2)}+\Phi^{(3)}\}+\Delta_3+O(N^{-2})$$

and

(1.3.14–4) $$\text{aver } \lambda_2^4=\left(\frac{\mu_2}{2}\right)^4\{105\Phi+(15\times4+9\times3)\Phi^{(2)}+6\times3\Phi^{(3)}+\Phi^{(4)}\}$$
$$+\Delta_4+O(N^{-2})$$

where

(1.3.15–1) $$\Delta_1 = \frac{\mu_2}{2}\frac{\Phi}{N-1}$$

(1.3.15–2) $$\Delta_2 = \left(\frac{\mu_2}{2}\right)^2 (6-2\delta_2)\Phi\frac{1}{N}$$

(1.3.15–3) $$\Delta_3 = \left(\frac{\mu_2}{2}\right)^3 \{(-30\delta_2+45)\Phi - 3(2\delta_2+3)\Phi^{(2)} + (-3+4\delta_1)\Phi^{(3)}\}\frac{1}{N}$$

and

(1.3.15–4) $$\Delta_4 = \left(\frac{\mu_2}{2}\right)^4 \{(-420\delta_2+420)\Phi - (156\delta_2+228)\Phi^{(2)} + (-2\delta_2+24\delta_1-18)6\Phi^{(3)} + (16\delta_1-8)\Phi^{(4)}\}\frac{1}{N}$$

in which $\delta_1 \overset{d}{=} \frac{\mu_3^2}{\mu_2^3} r_3$, $\delta_2 \overset{d}{=} \frac{\mu_4}{\mu_2^2}$.

In general, the $K(<\infty)$*th moment of* λ_2 *is*

(1.3.16) $$\text{aver } \lambda_2^K = \left(\frac{\mu_2}{2}\right)^K \sum_{\Phi} c_\Phi\{<2^K>^{**}\}\Phi^{(\Phi)} + O(N^{-1}) ,$$

where $c_\Phi\{<2^K>^{**}\}$ *stands for the numerical coefficient of the symmetric mean* $<2^K>^{**}$.

Consequently, we can evaluate the asymptotic properties of the moments of the statistics λ_{1p} and λ_2.

1.3.2 Properties of the estimates

Let us consider the properties of the estimates. First of all, for the original observation $y_n = \sum_{p=1}^{p} \alpha_p' x_{pn} + \dot{v}_{\pi(n)}' + \dot{\varepsilon}_n$ after the randomization procedure, we have

(1.3.17) $$\begin{aligned}\mathfrak{E}(y_n) &\overset{d}{=} \text{aver } \{E(y_n)\} \\ &= \text{aver } (\textstyle\sum_p \alpha_p' x_{pn}) + \text{aver}\{\dot{v}_{\pi(n)}'\} \\ &= \sum_p \alpha_p' x_{pn}\end{aligned}$$

(1.3.18) $$\begin{aligned}\sigma^2(y_n) &\overset{d}{=} \mathfrak{E}\{(y_n - \mathfrak{E}(y_n))^2\} \\ &= \text{aver } E\{\dot{v}_{\pi(n)}'^2 + \dot{\varepsilon}_n^2 + 2\dot{v}_{\pi(n)}'\dot{\varepsilon}_n)\} \\ &= \text{aver } (\dot{v}_{\pi(n)}'^2) + E(\dot{\varepsilon}_n^2) \\ &= \sigma_1^2 + \sigma_2^2\end{aligned}$$

and for the covariance of y_n and y_m is

$$\sigma^2(y_n, y_m) \overset{d}{=} \mathfrak{E}\{(y_n - \mathfrak{E}(y_n))(y_m - \mathfrak{E}(y_m))\}$$

$$= \text{aver}\{\dot{v}_{\pi(n)}' \ \dot{v}_{\pi(m)}'\}$$
$$= \sum_{r,s} \beta_r' \beta_s' \ \text{aver}(\dot{\xi}_{r\pi(n)} \dot{\xi}_{s\pi(m)}) \ .$$

Substituting the results of g. s. m. 's of O.A. in chapter 2 of the succeeding paper [34], the averaging value of the product $\dot{\xi}_{r\pi(n)} \ \dot{\xi}_{s\pi(m)}$ is obtained as follows,

$$\text{aver} \ \dot{\xi}_{r\pi(n)} \dot{\xi}_{s\pi(m)} = \begin{bmatrix} 1 & 1 \\ - & - \end{bmatrix}^* = -\frac{1}{N-1} \quad , \text{ for } r=s$$
$$= \begin{bmatrix} 1 & - \\ - & 1 \end{bmatrix}^* = \quad 0 \quad , \text{ for } r \neq s \ .$$

Then we get

$$\sigma^2(y_n, y_m) = \frac{-1}{N-1} \sum_{r=1}^{R} \beta_r'^2 = \frac{-1}{N-1} \sigma_1^2 \ . \tag{1.3.19}$$

From these results, it can be observed that the original data $y_n (n=1, 2, \cdots, N)$ in our RACOFFD method are mutually correlatedly distributed with mean $\sum_{p=1}^{P} \alpha_p' x_{pn}$, variance $\sigma_1^2 + \sigma_2^2$ and covariance $-\sigma_1^2/N-1$.

Furthermore, for the least square estimates

$$\hat{\alpha}_p' = \alpha_p' + \frac{1}{N} \sum x_{pn} \dot{v}_{\pi(n)}' + \frac{1}{N} \sum x_{pn} \dot{\varepsilon}_n$$
$$\overset{d}{=} \alpha_p' + \dot{V}_p' + \dot{\eta}_p \ ,$$

the expected value is given by

$$\mathfrak{E}(\hat{\alpha}_p') \overset{d}{=} \text{aver} \ E(\alpha_p' + \frac{1}{N} \sum x_{pn} \dot{v}_{\pi(n)}' + \frac{1}{N} \sum x_{pn} \dot{\varepsilon}_n) \tag{1.3.20}$$
$$= \alpha_p' .$$

For even K, we have

$$\mathfrak{E}(\hat{\alpha}_p'^K) = \text{aver} \ E \sum_{k=0}^{K} \binom{K}{k} \ (\alpha_p' + \dot{V}_p')^k \ \dot{\eta}_p^{K-k} \tag{1.3.21}$$
$$= \left(\frac{\sigma_2^2}{N}\right)^{\frac{K}{2}} \sum_{s=0}^{\frac{K}{2}} \binom{K}{2s} 2^s \ \text{aver} \ \lambda_{1p}^s E\left\{\left(\frac{\dot{\varepsilon}_n}{\sigma_2}\right)^{K-2s}\right\} \ .$$

For odd K, the Kth moment about mean is

$$\mathfrak{E}\{(\hat{\alpha}_p' - \alpha_p')^K\} = 0 \ . \tag{1.3.22}$$

Consequently, we get

$$\mathfrak{E}(\hat{\alpha}_p')^2 = \frac{\sigma_2^2}{N} (2 \ \text{aver} \ \lambda_{1p} + 1) \tag{1.3.23}$$

and

$$(1.3.24) \qquad \mathfrak{E}(\hat{\alpha}'_p)^4 = \left(\frac{\sigma_2^2}{N}\right)^2 \left(2^2 \text{ aver } \lambda_{1p}^2 + \binom{4}{2} 2 \text{ aver } \lambda_{1p} + 3\right) .$$

In these circumstances, we get easily the moments of $\hat{\alpha}'_p$ as the moments of normal variate with mean $\mathfrak{E}(\hat{\alpha}'_p) = \alpha'_p$ and variance

$$(1.3.25) \qquad \mathfrak{E}\{(\hat{\alpha}'_p - \alpha'_p)^2\} = \frac{\sigma_2^2}{N} \; 2 \text{ aver } \lambda_{1p} + \frac{\sigma_2^2}{N} - \alpha'^2_p$$

$$= \frac{\sigma_2^2}{N}\{\mu_2(2\tau_{1p}+1)\} + \frac{\sigma_2^2}{N} - \alpha'^2_p$$

$$= (\sigma_1^2 + \sigma_2^2)\frac{1}{N}$$

under the condition that the departures of the asymptotic moments of λ_{1p} from the exact moments Δ_{ip} ($i=1, 2, 3$ and 4) for the 1st, the 2nd, the 3rd and the 4th moments are negligible.

By virtue of Theorem B–2 and lemmas, we have the first four asymptotic moments of statistic, $\sum e_n^2/\sigma_1^2 + \sigma_2^2$, which is the estimate of the error term, as those moments of the central chi-square distribution with the degrees of freedom $\Phi = N - P$. Consequently, we can easily obtain

$$(1.3.26) \qquad \mathfrak{E}\left(\sum_{n=1}^{N} e_n^2\right) = (\sigma_1^2 + \sigma_2^2)(N-P) + O(N^{-1})$$

$$(1.3.27) \qquad \mathfrak{E}\left\{\left(\sum_{n=1}^{N} e_n^2\right)^2\right\} = (\sigma_1^2 + \sigma_2^2)^2 \; 2(N-P) + O(N^{-1})$$

and so on. Furthermore, the confidence interval of parameter, $\sigma_1^2 + \sigma_2^2$, can be obtained in the ordinary method by the chi-square distribution function with the degrees of freedom $\Phi = N - P$ under the condition in which the departures of the asymptotic monents of λ_2 from the exact moments of λ_2, $\Delta_i (i=1, 2, 3$ and $4)$ are negligible.

2. A practical application and simulations

2.1 An example of the practical applications of RACOFFD method

2.1.1 Aim of the experiments

An example may be taken in reference to plug welding. The aim of the experiments is to find out the effects of following factors to a response, "strength" of the metal welded by the method of plug welding. The shape of these specimens, by which we have observed the strength of welded metals, is sketched in Fig. 2–1. In Fig. 2–1, in which (a) is the upper view of the specimen and (b) is the side view, the part A is the welded

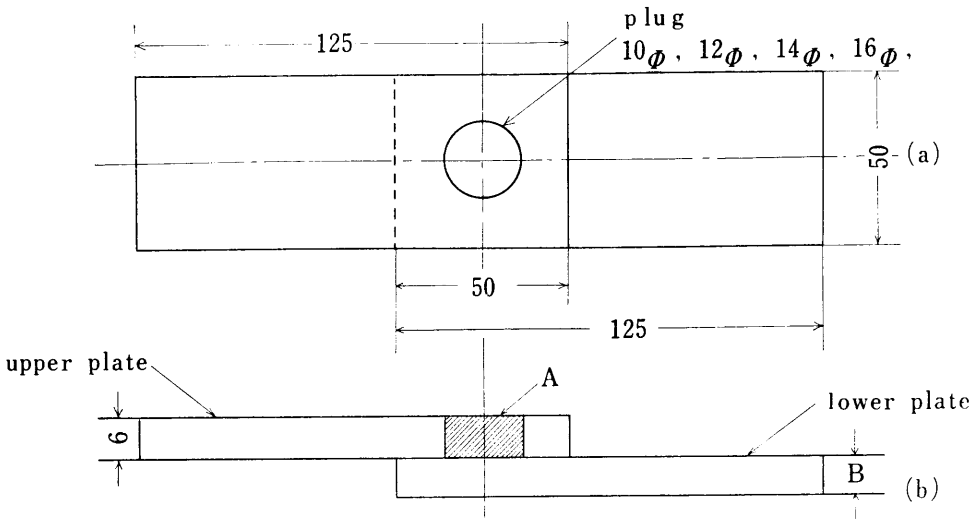

FIG. 2-1 The shape of specimens

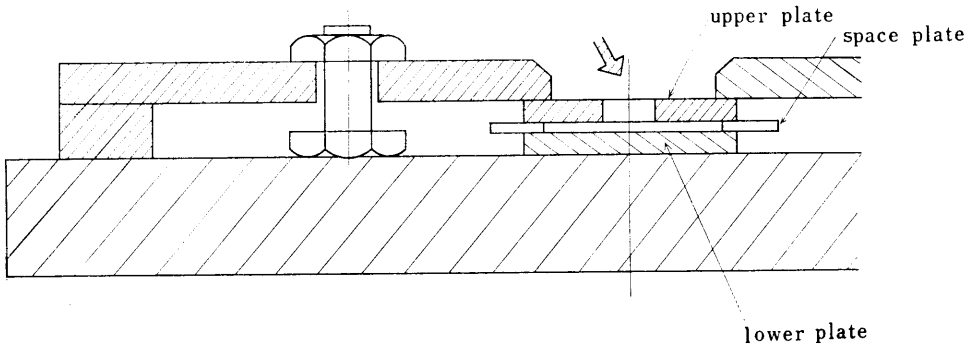

FIG. 2-2 Welding apparatus of the specimens

part of this specimen, which is the plug such that the pre-welding state of the part of upper plate in this figure is a hole.

In Fig. 2-2, the side view of welding apparatus of experiments in which the deposite metal fills out in the arrowed part under the controlled states

TABLE 2-1 Factors and those levels

Factor	Notation	levels to be controlled				dimension
		0	1	2	3	
Plug dianeter	A	10	12	14	16	mm
Thickness of lower plate	B	6	10			mm
Gas ratio	C	15 : 0	15 : 3			—
Paintings	D	No	Paint			—
Arc voltage	H	30	40			Volt
Gap	G	0	0.8			mm
Maker	F	F_1	F_2			
Welding current	E	250	300	350	400	Amp.

in the following factor combinations designed by the RACOFFD.

We shall tabulate the factors and these levels to be controlled which have to be investigated by the experimental method in Table 2–1. With respect to these factors and those levels, we have the following remarks:

(1) Diameter of the plug which is the welded part is represented by the dimension " A " in Fig. 2–1 and 2–2.
(2) The thickness of the lower plate is represented by the dimension " B " in Fig. 2–1.
(3) Gas ratio is the mixing ratio of two kinds of gases, such that " O_2" gas content versus " CO_2 " gas content.
(4) " Painting " means two states of specimens before the welding operation that the both osculating planes are painted or not.
(5) " Maker " means the maker of materials used in the welding operation.
(6) The gap of both plates is controlled by the system shown in Fig. 2–2, where the space plates generate the gap.
(7) " Welding current " and "arc voltage" are the controllable variables in the welding procedure.
(8) The responses of these experiments are observed by a 20–ton Amslar strength testing machine.

After some considerations concerning to the phenomena in the factor space constructed by above factors, we separate the factors into 2 groups such that the 1st group of factors contains A, B, C, D and the 2nd group of factors contains E, F, G, H. In virtue of the decomposition of factors $A, B, \cdots, G$ and H, we can easily assign these factors in our random combined fractional factorial designs with two levels and size $N=32$.

2.1.2 Design matrix and experimental results

We can show the design matrix with the responses as in Table 2–2, in which the prescribed factors $A, B, \cdots, G$ and H are allocated in the RACOFFD with two levels and size $N=32$ (The procedure of allocation of factors in the design matrix is described in the end of introduction of this paper). In this table, the two levels of factors are denoted in " 0 " and " 1 ", and the four levels of factors, A and E, are denoted in " 00 ", " 01 ", " 10 " and " 11 " corresponding to " 1 ", " 2 ", " 3 " and " 4 " levels, respectively. The strengthes of the specimens, which are the responses of the present experiments, are given in the last column.

2.1.3 Analysis of the Data

From the results of experiments, which are presented in Table 2–2, we can analyse variance of these responses into the effects of the 1st group factors by the ordinary procedure of analysis of variances under assumption that the effects of the 2nd group factors are mutually independently distributed

TABLE 2-2 Design matrix and results of plug welding experimets

No.	1st group				2nd group					Response
	A	B	C	D	E	F	G	H		strength
1	0	0	0	0	0	1	1	0	1	1	4.75
2	0	0	0	0	1	1	0	1	1	1	5.50
3	0	0	0	1	0	1	0	0	1	1	6.70
4	0	0	0	1	1	0	1	0	1	0	3.95
5	0	0	1	1	1	0	1	1	0	1	3.19
6	0	0	1	1	0	0	0	0	1	0	2.69
7	0	0	1	0	1	1	0	0	0	0	6.20
8	0	0	1	0	0	1	0	0	0	1	6.30
9	0	1	1	1	1	0	0	0	0	1	4.90
10	0	1	1	1	0	0	1	0	0	1	3.30
11	0	1	1	0	1	1	1	0	0	0	4.45
12	0	1	1	0	0	0	0	0	0	0	3.10
13	0	1	0	0	0	1	1	0	0	1	5.05
14	0	1	0	0	1	1	1	1	1	1	4.75
15	0	1	0	1	0	0	0	1	1	1	3.65
16	0	1	0	1	1	0	0	1	0	0	5.65
17	1	1	1	1	1	0	1	1	1	1	5.80
18	1	1	1	1	0	1	1	1	0	0	7.85
19	1	1	1	0	1	0	0	1	1	0	6.70
20	1	1	1	0	0	0	1	0	1	1	5.00
21	1	1	0	0	0	1	0	1	0	0	6.05
22	1	1	0	0	1	1	1	1	0	1	4.65
23	1	1	0	1	0	0	1	0	0	0	4.97
24	1	1	0	1	1	1	1	0	1	0	6.98
25	1	0	0	0	0	0	0	0	1	1	5.95
26	1	0	0	0	1	0	0	1	0	1	6.23
27	1	0	0	1	0	1	0	1	1	0	7.30
28	1	0	0	1	1	0	1	1	1	0	7.20
29	1	0	1	1	1	0	1	1	1	0	8.00
30	1	0	1	1	0	1	0	0	1	0	8.65
31	1	0	1	0	1	1	1	1	0	0	8.43
32	1	0	1	0	0	1	0	1	0	1	10.05

TABLE 2-3 Analysis of variance-1st group factors-

Factors	S. S	D. F	M. S	F_0	$F^{f_1}_{f_2}(0.20)$
A	5,261	3	1,754	12	1.78
B	78	1	78	0.5	1.82
C	18	1	18	0.1	1.82
D	3	1	3	0.02	1.82
A×B	1,160	3	387	2.6	1.78
A×C	618	3	206	1.4	1.78
A×D	367	3	123	0.8	1.78
B×C	276	1	276	1.9	1.82
B×D	1	1	1	—	1.82
C×D	0.2	1	0.2	—	1.82
Error	1,901	14	146		
Total	9,684	31			

according to the normal distribution, vicé versa. In Table 2–3 and 2–4, we shall present the results of analysis of variance concerning to the 1st and 2nd group factors, respectively.

In these analysis variance tables, we shall abbreviate *S.S.* to show the

TABLE 2-4 Analysis of variance-2nd group factors-

Factors	S. S	D. F	M. S	Fo	$F_{f_2}^{f_1}(0.20)$
E	2,383	3	794	3.3	1.78
F	1,012.5	1	1,012.5	4.2	1.82
G	98	1	98	0.4	1.82
H	480.5	1	480.5	2.0	1.82
E × F	235	3	78.3	0.3	1.78
E × G	230.5	3	76.5	0.3	1.78
E × H	1,110	3	370	1.6	1.78
F × G	162	1	162	0.7	1.82
F × H	648	1	648	2.7	1.82
G × H	220.5	1	220.5	0.9	1.82
Error	3,103.5	14	238.7		
Total	9,683.5	31			

sums of squares, *D.F.* to show the degrees of freedom, *M.S.* to show the mean squares, F_0 to show the observed F and $F_{f_2}^{f_1}$ (0.20) to show the 20% point in F-distribution with pair of degrees of freedom f_1 and f_2.

In these analysis of variance tables, Table 2-3 and 2-4, the curves of the several significant effects of factors in the analysis of variance test are given in Fig. 2-3, 2-4, 2-5, 2-6, 2-7, 2-8 and 2-9. These figures represent effective valuable informations concerning to the aim of these experiments, as follows.

(1) Fig 2-3 gives the information that the strength of welded metals increases almost linearly as the plug diameters increase and this is quite reasonable as may be found in our preliminary considerations on the physical aspects of this phenomena.

(2) In Fig. 2-4, we get an information concerning that interaction between A and B such that the effect of factor A in B_0 is less than the effect of A in B_1.

(3) The interaction of B and C is shown in Fig. 2-5, which shows that the effect of factor B in C_1 is smaller than corresponding effect in C_0.

(4) The main effect of factor E is shown in Fig. 2-6, which gives the effect of welding current is represented in a smooth curve.

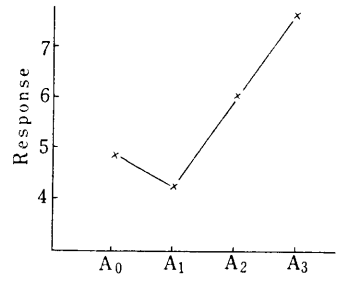

FIG. 2-3 Response to A

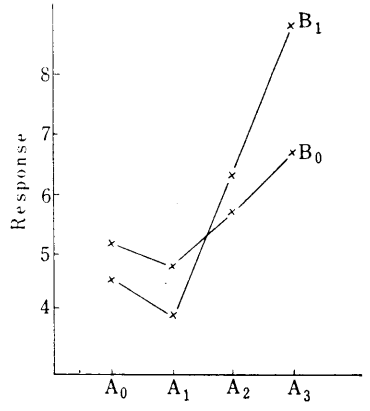

FIG. 2-4 Interation of A×B

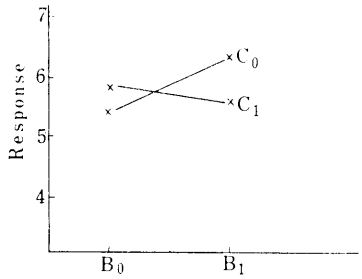

FIG. 2-5 Interation of C and B

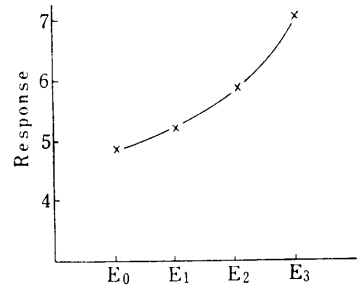

FIG. 2-6 Factor E

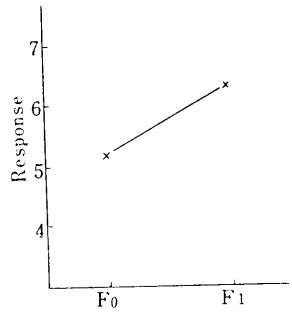

FIG. 2-7 Fator F

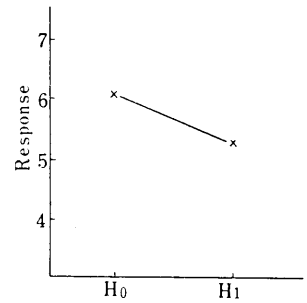

FIG. 2-8 Fator H

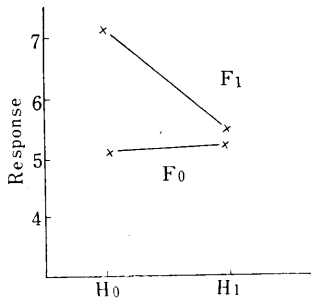

FIG. 2-9 Interaction H×F

(5) The main effects of factors F and H are represented in Fig. 2–7 and 2–8.

(6) The interaction between F and H is shown in Fig. 2–9, which gives that the effect of factor H is negligibly small in "0" level of F.

2.2 Simulations

2.2.1 Setting up of the models

To visualize the efficiency of our inference in the RACOFFD experiments, we shall set up the synthetic models of experiments, as follows (refer to S. Brooks [8]).

As we have seen in our previous chapter of this paper, the objective world of our RACOFFD method can be assumed in the linear form of unknown parameters $\alpha'_1, \alpha'_2, \cdots, \alpha'_P, \beta'_1, \beta'_2, \cdots, \beta'_{R-1}$ and β_R such that

$$y_n = \sum_{p=1}^{P} \alpha'_p x_{pn} + \sum_{r=1}^{R} \beta'_r \xi_{r\pi(n)} + \dot{\varepsilon}_n \ , \tag{2.2.1}$$

where the variables x_{pn} ($p=1, 2, \cdots, P$; $n=1, 2, \cdots, N$) and $\xi_{r\pi(n)}$ ($r=1, 2, \cdots, R$; $n=1, 2, \cdots, N$) are the elements of the design matrix

$$D=\begin{Vmatrix} x_{11} & x_{12} & & x_{1N} \\ \cdots & \cdots & \cdots & \cdots \\ \cdots & \cdots & \cdots & \cdots \\ x_{P1} & x_{P2} & \cdots & x_{PN} \\ \xi_{1\pi(1)} & \xi_{1\pi(2)} & \cdots & \xi_{1\pi(N)} \\ \cdots & \cdots & \cdots & \cdots \\ \cdots & \cdots & \cdots & \cdots \\ \xi_{R\pi(1)} & \xi_{R\pi(2)} & \cdots & \xi_{R\pi(N)} \end{Vmatrix} . \tag{2.2.2}$$

If we control these variables in two levels having narrow interval, then a number of unknown parameters to be explored can be assumed to exist in our objective world, but the size of these parameters may be controlled under a small value. These aspects of experiments can be often found in the problem of quality control, where there are many unknown and uncontrolled factors which affect the variability of the qualities to be controlled.

As we have seen in chapter 1 of this paper, the power of test of the null hypothesis, H_0: $\alpha'_p=0$, is affected by the size of three parameters α_0, $\Phi=N-P$ and $\tau_p=N\alpha_p^2/2(1+\mu_2)$, under the restricted situation which is determined by the parameters N, β'_1, β'_2, $\cdots$, β'_R refering to Table 1–2.

Furthermore, the estimates in our RACOFFD situation are fluctuated according to the prescribed distribution under the restricted conditions.

2.2.2 Designs and analysis

Let us examine following three situations.

MODEL (A): We shall examine the power of test in the ordinary fractional factorial design such that $y_n=\sum_{p=1}^{P} \alpha'_p x_{pn}+\varepsilon_n$, where $\{\alpha'_p\}=\{1, 0.5, 0, \cdots\cdots, 0.5, 1\}$ and $\{\varepsilon_n\}=\{-0.6, 2.1, \cdots, -1.5\}$ are randomly sampled from the rounded random numbers according to the normal distrbution with mean 0 and variance 1. These synthetic data are tabulated in Table 2–5 with the design matrix, in which we shall denote the design matrix in the transposed style thus $\zeta_n=\sum_{p=1}^{P} \alpha'_p x_{pn}$ in the 3rd column from the last one ε_n in the 2nd column from the last and the synthetic responses in the last column.

The analysis of variance for these data is tabulated in Table 2–6, of which 1st column gives the symbols the 2nd column, the sum of squares corresponding to the items in the 1st column the succeeding columns give the same items as those of the ordinary analysis of variance table, except the last 2 columns which give the values of parameters.

TABLE 2-5 Synthetic mndel of ordinary FFD

n	α 1	2 0.5	3 0	4 1	5 0.5	6 0	7 0.5	8 0.5	9 0	10 -0.5	11 -0.5	12 0	13 0	14 0.5	15 1	ζ_n	ξ_n	y_n
1	0	0	0	0	0	0	0	0	0	0	0	0	0	0	0	4.5	−0.6	3.9
2	0	0	0	0	1	1	0	1	1	0	0	1	1	0	1	0.5	2.1	2.6
3	0	0	0	1	0	1	1	0	1	0	1	0	1	1	0	1.5	1.5	3.0
4	0	0	0	1	1	0	1	1	0	0	1	1	0	1	1	−2.5	0.7	−1.8
5	0	0	1	1	1	1	0	0	0	1	1	1	1	0	0	3.5	0.8	4.3
6	0	0	1	1	0	0	0	1	1	1	1	0	0	0	1	1.5	−1.8	−0.3
7	0	0	1	0	1	0	1	0	1	1	0	1	0	1	0	2.5	0.9	3.4
8	0	0	1	0	0	1	1	1	0	1	0	0	1	1	1	0.5	1.0	1.5
9	0	1	1	1	1	1	1	1	1	0	0	0	0	0	0	−1.5	0.5	−1.0
10	0	1	1	1	0	0	1	0	0	0	0	1	1	0	1	−1.5	−0.9	−2.4
11	0	1	1	0	1	0	0	1	0	0	1	0	1	1	0	1.5	1.1	2.6
12	0	1	1	0	0	1	0	0	1	0	1	1	0	1	1	1.5	1.6	3.1
13	0	1	0	0	0	0	1	1	1	1	1	1	1	0	0	3.5	0.9	4.4
14	0	1	0	0	1	1	1	0	0	1	1	0	0	0	1	1.5	1.2	2.7
15	0	1	0	1	0	1	0	1	0	1	0	1	0	1	0	0.5	−1.1	−0.6
16	0	1	0	1	1	0	0	0	1	1	0	0	1	1	1	−1.5	0.2	−1.3
17	1	1	1	1	1	1	1	1	1	1	1	1	1	1	1	−4.5	−0.3	−4.8
18	1	1	1	1	0	0	1	0	0	1	1	0	0	1	0	−0.5	0.9	0.4
19	1	1	1	0	1	0	0	1	0	1	0	1	0	0	1	−1.5	0.3	−1.2
20	1	1	1	0	0	1	0	0	1	1	0	0	1	0	0	2.5	−2.2	0.3
21	1	1	0	0	0	0	1	1	1	0	0	0	0	1	1	−3.5	−1.4	−4.9
22	1	1	0	0	1	1	1	0	0	0	0	1	1	1	0	−1.5	−1.6	−3.1
23	1	1	0	1	0	1	0	1	0	0	1	0	1	0	1	−2.5	0.9	−1.6
24	1	1	0	1	1	0	0	0	1	0	1	1	0	0	0	−0.5	−2.7	−3.2
25	1	0	0	0	0	0	0	0	0	1	1	1	1	1	1	1.5	−1.2	0.3
26	1	0	0	0	1	1	0	1	1	1	1	0	0	1	0	1.5	0.6	2.1
27	1	0	0	1	0	1	1	0	1	1	0	1	0	0	1	−1.5	1.3	−0.2
28	1	0	0	1	1	0	1	1	0	1	0	0	1	0	0	−1.5	1.8	0.3
29	1	0	1	1	1	1	0	0	0	0	0	0	0	1	1	−3.5	0.5	−3.0
30	1	0	1	1	0	0	0	1	1	0	0	1	1	1	0	−1.5	−1.1	−2.6
31	1	0	1	0	1	0	1	0	1	0	1	0	1	0	1	−0.5	−0.3	−0.8
32	1	0	1	0	0	1	1	1	0	0	1	1	0	0	0	1.5	−1.5	0

TABLE 2-6 Analysis of variance in FFD

Parameters	S. S	D. F	M. S	F_0	Value of α_p	$\hat{\alpha}_p$
1	66.41	1	66.41	*33.71	1	1.44
2	16.97	1	16.97	* 8.61	0.5	0.73
3	0.30	1	0.30	0.15	0	0.10
4	31.40	1	31.40	*15.94	1	0.99
5	1.32	1	1.32	0.64	0.5	0.20
6	2.26	1	2.26	1.15	0	−0.26
7	2.37	1	2.37	1.20	0.5	0.26
8	5.04	1	5.04	* 2.56	0.5	0.40
9	0.20	1	0.20	0.10	0	0.10
10	13.13	1	13.13	* 6.66	−0.5	−0.64
11	10.93	1	10.93	* 5.55	−0.5	−0.58
12	1.02	1	1.02	0.52	0	0.17
13	0.34	1	0.34	0.17	0	−0,10
14	5.70	1	5.70	* 2.89	0.5	0.41
15	21.62	1	21.62	*10.97	1	0.82
error	31.46	15	1.97	$\sigma_2^2=1$		
total	210.47	32				

MODEL (B) : The second model is RACOFFD in which another fractional factorial design conbinates randomly to the model (A), such that $y_n = \sum \alpha'_p x_{pn} + \sum \beta'_r \xi_{r\pi(n)} + \dot{\varepsilon}_n$, where $\{\alpha'_p\} = \{1, 0.5, \cdots, 0.5, 1\}$, $\{\beta'_r\} = \{0, 0.5, \cdots, 0.5, 0\}$, $\{\dot{\varepsilon}_n\} = \{-0.6, 2.1, \cdots, -0.3, -1.5\}$, are sampled from the normal population in the similar manner as in the model (A), and $\pi(n)$ is a permutation of the numbers 1, 2, $\cdots$, 32.

These synthetic data are tabulated in Table 2–7 with the RACOFFD design matrix in which the design matrix is presented in the transposed style as in the model (A), the 1st sub-matrix is presented in the columns from 2nd to 16th, 2nd sub-matrix $\| \xi_{r\pi(n)} \|$ $(r=1, 2, \cdots, R;\ n=1, 2, \cdots, 32)$ is presented in the columns from 18th to 33th, and $\zeta_n = \sum_{p=1}^{P} \alpha_p x_{pn}$, $v_{\pi(n)} = \sum_{r=1}^{R} \beta'_r \xi_{r\pi(n)}$ are presented in the 17th and 34th columns, respectively, and so on.

The analysis of variances of these data concerning to the 1st group factors $\{\alpha'_p\}$ $(p=1, 2, \cdots, P)$ is given in Table 2–8 and similar one for the 2nd group of factors $\{\beta'_r\}$ $(r=1, 2, \cdots, R)$ is given in Table 2–9.

MODEL (C) : The last model is the RACOFFD design in which we shall confirm the efficiency of our inference in the results of model (B). Then, we have the model $y_n = \sum \alpha'_p x_{pn} + \sum \beta'_r \xi_{r\pi(n)} + \dot{\varepsilon}_n$, where $\{\alpha'_p\} = -0.5, 1, \cdots, 0.5, -0.5$, $\{\beta'_r\} = 0, 0, \cdots, -0.5$, $\{\dot{\varepsilon}_n\} = -0.8, 0.4, \cdots, -1.2$, are constructed in similar way to the previous model, and $\pi(n)$ is also a permutation of 32 numbers. These synthetic data with design matrix are presented in Table 2–10 as tabulated in similar way to Table 2–7, and the results of analysis of variance concerning to 1st and 2nd group factors are given in Table 2–11 and 2–12, respectively.

2.2.3 Considerations on the results of the simulations

In these synthetic experiments, we can observe the fact that the parameters having large value, 1 or -1, are detected by these RACOFFD method same as the results in the ordinary fractional factorial designs, and the parameters having small value which is 0.5 or -0.5, are not always detected by these RACOFFD same as the results in the ordinary fractional factorial designs. In the contrary, the non-significant parameters are sometimes judged significant in the RACOFFD test, in which we tested the null hypothesis $H_0 : \alpha'_p = 0$ by appealing to the statistic F in the size of test $\alpha_0 = 0.20$.

In virtue of the results in chapter 1, we can evaluate the of power of test by

$$1 - Q_2 = 1 - I_{x_0}\left(\frac{\nu_p}{2}, \frac{\Phi}{2}\right)$$

TABLE 2-7 Synthetic

(1)

n	α 1	2 0.5	3 0	4 1	5 0.5	6 0	7 0.5	8 0.5	9 0	10 -0.5	11 -0.5	12 0	13 0	14 0.5	15 1	ς_n	$\pi_{(n)}$
1	0	0	0	0	0	0	0	0	0	0	0	0	0	0	0	4.5	23
2	0	0	0	0	1	1	0	1	1	0	0	1	1	0	1	0.5	29
3	0	0	0	1	0	1	1	0	1	0	1	0	1	1	0	1.5	16
4	0	0	0	1	1	0	1	1	0	0	1	1	0	1	1	--2.5	32
5	0	0	1	1	1	1	0	0	0	1	1	1	1	0	0	3.5	24
6	0	0	1	1	0	0	0	1	1	1	1	0	0	0	1	1.5	26
7	0	0	1	0	1	0	1	0	1	1	0	1	0	1	0	2.5	18
8	0	0	1	0	0	1	1	1	0	1	0	0	1	1	1	0.5	27
9	0	1	1	1	1	1	1	1	1	0	0	0	0	0	0	—1.5	13
10	0	1	1	1	0	0	1	0	0	0	0	1	1	0	1	—1.5	5
11	0	1	1	0	1	0	0	1	0	0	1	0	1	1	0	1.5	6
12	0	1	1	0	0	1	0	0	1	0	1	1	0	1	1	1.5	15
13	0	1	0	0	0	0	1	1	1	1	1	1	1	0	0	3.5	10
14	0	1	0	0	1	1	1	0	0	1	1	0	0	0	1	1.5	25
15	0	1	0	1	0	1	0	1	0	1	0	1	0	1	0	0.5	1
16	0	1	0	1	1	0	0	0	1	1	0	0	1	1	1	—1.5	7
17	1	1	1	1	1	1	1	1	1	1	1	1	1	1	1	--4.5	3
18	1	1	1	1	0	0	1	0	0	1	1	0	0	1	0	—0.5	28
19	1	1	1	0	1	0	0	1	0	1	0	1	0	0	1	—1.5	14
20	1	1	1	0	0	1	0	0	1	1	0	0	1	0	0	2.5	30
21	1	1	0	0	0	0	1	1	1	0	0	0	0	1	1	—3.5	8
22	1	1	0	0	1	1	1	0	0	0	0	1	1	1	0	—1.5	22
23	1	1	0	1	0	1	0	1	0	0	1	0	1	0	1	—2.5	20
24	1	1	0	1	1	0	0	0	1	0	1	1	0	0	0	--0.5	31
25	1	0	0	0	0	0	0	0	0	1	1	1	1	1	1	1.5	11
26	1	0	0	0	1	1	0	1	1	1	1	0	0	1	0	1.5	9
27	1	0	0	1	0	1	1	0	1	1	0	1	0	0	1	--1.5	2
28	1	0	0	1	1	0	1	1	0	1	0	0	1	0	0	—1.5	21
29	1	0	1	1	1	1	0	0	0	0	0	0	0	1	1	—3.5	4
30	1	0	1	1	0	0	0	1	1	0	0	1	1	1	0	—1.5	12
31	1	0	1	0	1	0	1	0	1	0	1	0	1	0	1	—0.5	19
32	1	0	1	0	0	1	1	1	0	0	1	1	0	0	0	1.5	17

TABLE 2-8 Analysis of variance in RACOFFD

1st gronp

Parameters	S. S	D. F	M. S	F_0	Value of α_p	$\hat{\alpha}_p$
1	75.34	1	75.34	*17.20	1	1.54
2	36.77	1	36.77	* 8.38	0.5	1.07
3	1.16	1	1.16	0.26	0	0.19
4	13.39	1	13.39	* 3.06	1	0.65
5	6.57	1	6.57	1.50	0.5	—0.45
6	0.63	1	0.63	0.14	0	0.14
7	20.64	1	20.64	* 4.71	0.5	0.80
8	7.70	1	7.70	1.76	0.5	0.49
9	0.38	1	0.38	0.09	0	0.11
10	20.32	1	20.38	* 4.64	—0.5	—0.80
11	5.87	1	5.87	1.34	—0.5	—0.43
12	0.02	1	0.02	0	0	0.02
13	1.24	1	1.24	0.28	0	—0.20
14	6.57	1	6.57	1.50	0.5	0.45
15	14.18	1	14.18	* 3.24	1	0.67
error	70.13	15	4.38	$\sigma_1^2+\sigma_2^2=3.67$		
total	280.91	32				

model in RACOFFD

(2)

$\beta 1$	2	3	4	5	6	7	8	9	10	11	12	13	14	15	v_n	ε_n	y_u
0	0.5	-0.5	0.5	-0.5	0.5	0	0	0	0.5	0	-0.5	1	0.5	0			
1	1	0	1	0	1	0	1	0	0	1	0	1	0	1	−2.0	−0.6	1.9
1	0	1	1	1	1	0	0	0	0	0	0	0	1	1	1.0	2.1	3.6
0	1	0	1	1	0	0	0	1	1	0	0	1	1	1	−3.0	1.5	0
1	0	1	0	0	1	1	1	0	0	1	1	0	0	0	3.0	0.7	1.2
1	1	0	1	1	0	0	0	1	0	1	1	0	0	0	2.0	0.8	6.3
1	0	0	0	1	1	0	1	1	1	1	0	0	1	0	0	−1.8	−0.3
1	1	1	1	0	0	1	0	0	1	1	0	0	1	0	−1.0	0.9	2.4
1	0	0	1	0	1	1	0	1	1	0	1	0	0	1	0	1.0	1.5
0	1	0	0	0	0	1	1	1	1	1	1	1	0	0	−1.0	0.5	−2.0
0	0	1	1	1	1	0	0	0	1	1	1	1	0	0	0	−0.9	−2.4
0	0	1	1	0	0	0	1	1	1	1	0	0	0	1	1.0	1.1	3.6
0	1	0	1	0	1	0	1	0	1	0	1	0	1	0	−2.0	1.6	1.1
0	1	1	1	0	0	1	0	0	0	0	1	1	0	1	0	0.9	4.4
1	0	0	0	0	0	0	0	0	1	1	1	1	1	1	−1.0	1.2	1.7
0	0	0	0	0	0	0	0	0	0	0	0	0	0	0	2.0	−1.1	1.4
0	0	1	0	1	0	1	0	1	1	0	1	0	1	0	3.0	0.2	1.7
0	0	0	1	0	1	1	0	1	0	1	0	1	1	0	−3.0	−0.3	−7.8
1	0	0	1	1	0	1	1	0	1	0	0	1	0	0	−1.0	0.9	−0.6
0	1	0	0	1	1	1	0	0	1	1	0	0	0	1	0	0.3	−1.2
1	0	1	1	0	0	0	1	1	0	0	1	1	1	0	0	−2.2	0.3
0	0	1	0	0	1	1	1	0	1	0	0	1	1	1	−2.0	−1.4	−6.9
1	1	0	0	1	1	1	0	0	0	0	1	1	1	0	−1.0	−1.6	−4.1
1	1	1	0	0	1	0	0	1	1	0	0	1	0	0	−2.0	0.9	−3.6
1	0	1	0	1	0	1	0	1	0	1	0	1	0	1	2.0	−2.7	−1.2
0	1	1	0	1	0	0	1	0	0	1	0	1	1	0	0	−1.2	0.3
0	1	1	1	1	1	1	1	1	0	0	0	0	0	0	1.0	0.6	3.1
0	0	0	0	1	1	0	1	1	0	0	1	1	0	1	1.0	1.3	0.8
1	1	0	0	0	0	1	1	1	0	0	0	0	1	1	0	1.8	0.3
0	0	0	1	1	0	1	1	0	0	1	1	0	1	1	2.0	0.5	−1.0
0	1	1	0	0	1	0	0	1	0	1	1	0	1	1	1.0	−1.1	−1.6
1	1	1	0	1	0	0	1	0	1	0	1	0	0	1	3.0	−0.3	2.2
1	1	1	1	1	1	1	1	1	1	1	1	1	1	1	−2.0	−1.5	−2.0

TABLE 2-9 Analysis of variance in RACOFFD

2nd group

Parameters	S. S	D. F	M. S	F_0	Value of β_r	$\hat{\beta}_r$
1	8.10	1	8.10	1.73	0	−0.50
2	4.43	1	4.43	0.94	0.5	−0.37
3	1.58	1	1.58	0.34	−0.5	−0.22
4	20.64	1	20.64	* 4.40	0.5	−0.80
5	1.67	1	1.67	0.36	−0.5	−0.23
6	41.63	1	41.63	* 8.88	0.5	1.14
7	23.63	1	23.63	* 5.04	0	0.86
8	0.03	1	0.03	0.01	0	−0.03
9	0.75	1	0.04	0.16	0	0.15
10	5.04	1	5.04	1.07	0.5	0.40
11	1.57	1	1.67	0.36	0	0.23
12	5.36	1	5.36	1.14	−0.5	−0.41
13	64.70	1	64.70	*13.80	1	1.42
14	23.98	1	23.98	* 5.11	0.5	0.87
15	2.59	1	2.59	0.55	0	−0.28
error	75.11	15	4.69	$\sigma_1^2+\sigma_2^2=5.75$		
total	280.91	32				

TABLE 2-10 Synthetic

(3)

n	$\alpha 1$ -0.5	2 1	3 -0.5	4 -0.5	5 0.5	6 0	7 -0.5	8 0	9 0.5	10 1	11 0.5	12 -0.5	13 1	14 0.5	15 -0.5	ζ_n	$\pi_{(n)}$
1	0	0	0	0	0	0	0	0	0	0	0	0	0	0	0	2.0	15
2	0	0	0	0	1	1	0	1	1	0	0	1	1	0	1	0	19
3	0	0	0	1	0	1	1	0	1	0	1	0	1	1	0	—1.0	3
4	0	0	0	1	1	0	1	1	0	0	1	1	0	1	1	3.0	4
5	0	0	1	1	1	1	0	0	0	1	1	1	1	0	0	—1.0	7
6	0	0	1	1	0	0	0	1	1	1	1	0	0	0	1	1.0	22
7	0	0	1	0	1	0	1	0	1	1	0	1	0	1	0	0	32
8	0	0	1	0	0	1	1	1	0	1	0	0	1	1	1	0	28
9	0	1	1	1	1	1	1	1	1	0	0	0	0	0	0	1.0	9
10	0	1	1	1	0	0	1	0	0	0	0	1	1	0	1	3.0	14
11	0	1	1	0	1	0	0	1	0	0	1	0	1	1	0	—4.0	18
12	0	1	1	0	0	1	0	0	1	0	1	1	0	1	1	0	16
13	0	1	0	0	0	0	1	1	1	1	1	1	1	0	0	—4.0	1
14	0	1	0	0	1	1	1	0	0	1	1	0	0	0	1	—2.0	5
15	0	1	0	1	0	1	0	1	0	1	0	1	0	1	0	—1.0	29
16	0	1	0	1	1	0	0	0	1	1	0	0	1	1	1	—5.0	12
17	1	1	1	1	1	1	1	1	1	1	1	1	1	1	1	—2.0	25
18	1	1	1	1	0	0	1	0	0	1	1	0	0	1	0	0	20
19	1	1	1	0	1	0	0	1	0	1	0	1	0	0	1	1.0	26
20	1	1	1	0	0	1	0	0	1	1	0	0	1	0	0	—3.0	17
21	1	1	0	0	0	0	1	1	1	0	0	0	0	1	1	1.0	24
22	1	1	0	0	1	1	1	0	0	0	0	1	1	1	0	—1.0	13
23	1	1	0	1	0	1	0	1	0	0	1	0	1	0	1	0	31
24	1	1	0	1	1	0	0	0	1	0	1	1	0	0	0	0	2
25	1	0	0	0	0	0	0	0	0	1	1	1	1	1	1	—1.0	8
26	1	0	0	0	1	1	0	1	1	1	1	0	0	1	0	—3.0	21
27	1	0	0	1	0	1	1	0	1	1	0	1	0	0	1	4.0	30
28	1	0	0	1	1	0	1	1	0	1	0	0	1	0	0	0	6
29	1	0	1	1	1	1	0	0	0	0	0	0	0	1	1	4.0	27
30	1	0	1	1	0	0	0	1	1	0	0	1	1	1	0	2.0	10
31	1	0	1	0	1	0	1	0	1	0	1	0	1	0	1	1.0	11
32	1	0	1	0	0	1	1	1	0	0	1	1	0	0	0	5.0	23

TABLE 2-11 Analysis of variance in RACOFFD

1st group

Parameters	S. S	D. F	M. S	F_0	Value of α_p	$\hat{\alpha}_p$
1	4.43	1	4.43	1.21	—0.5	—0.37
2	14.18	1	14.18	*3.83	1	0.66
3	21.29	1	21.29	*5.80	—0.5	—0.82
4	30.23	1	30.23	*8.24	—0.5	—0.97
5	0.69	1	0.69	0.19	0.5	0.15
6	1.49	1	1.49	0.41	0	0.22
7	14.45	1	14.45	*3.94	—0.5	0.67
8	16.39	1	16.39	*4.47	0	0.72
9	0.95	1	0.95	0.26	0.5	0.17
10	17.26	1	17.26	*4.70	1	0.73
11	28.31	1	28.31	*7.71	0.5	0.94
12	36.34	1	36.34	*9.90	—0.5	—1.07
13	22.61	1	22.61	*6.16	1	0.84
14	2.82	1	2.82	0.77	0.5	0.30
15	16.10	1	16.10	*4.39	—0.5	—0.71
error	58.72	15	3.67	$\sigma_1^2+\sigma_2^2=4.25$		
total	286.26	32				

model in RACOFFD

(4)

$\beta 1$ 0	2 0	3 0	4 0.5	5 0.5	6 -0.5	7 -0.5	8 0.5	9 0	10 -0.5	11 0.5	12 -1	13 0.5	14 0	15 -0.5	v_n	ε_n	y_n
0	1	0	1	0	1	0	1	0	1	0	1	0	1	0	1.5	—0.8	2.7
1	1	1	0	1	0	0	1	0	1	0	1	0	0	1	1.5	0.4	1.9
0	0	0	1	0	1	1	0	1	0	1	0	1	1	0	—1.5	—1.2	—3.7
0	0	0	1	1	0	1	1	0	0	1	1	0	1	1	—0.5	—1.4	1.1
0	0	1	0	1	0	1	0	1	1	0	1	0	1	0	2.5	0.2	1.7
1	1	0	0	1	1	1	0	0	0	0	1	1	1	0	1.5	1.2	3.7
1	0	1	0	0	1	1	1	0	0	1	1	0	0	0	1.5	0.6	2.1
1	0	0	1	1	0	1	1	0	1	0	0	1	0	0	—2.5	—1.8	—4.3
0	1	1	1	1	1	1	1	1	0	0	0	0	0	0	—1.5	1.3	0.8
0	1	0	0	1	1	1	0	0	1	1	0	0	0	1	1.5	0.6	5.1
1	1	1	1	0	0	1	0	0	1	1	0	0	1	0	—0.5	0.5	—4.0
0	1	0	1	1	0	0	0	1	1	0	0	1	1	1	—1.5	0.5	—1.0
0	0	0	0	0	0	0	0	0	0	0	0	0	0	0	—0.5	—0.3	—4.8
0	0	1	1	1	1	0	0	0	1	1	1	1	0	0	—0.5	0.1	—2.4
1	0	1	1	1	1	0	0	0	0	0	0	0	1	1	—0.5	0.9	—0.6
0	1	1	0	0	1	0	0	1	0	1	1	0	1	1	2.5	1.0	—1.5
1	0	0	0	0	0	0	0	0	1	1	1	1	1	1	1.5	1.3	0.8
1	1	1	0	0	1	0	0	1	1	0	0	1	0	0	0.5	—1.3	—0.8
1	0	0	0	1	1	0	1	1	1	1	0	0	1	0	—1.5	1.5	1.0
1	1	1	1	1	1	1	1	1	1	1	1	1	1	1	0.5	1.8	—0.7
1	1	0	1	1	0	0	0	1	0	1	1	0	0	0	—1.5	0.4	—0.1
0	1	0	0	0	0	1	1	1	1	1	1	1	0	0	0.5	0.5	0
1	0	1	0	1	0	1	0	1	0	1	0	1	0	1	—1.5	0.2	—1.3
0	0	0	0	1	1	0	1	1	0	0	1	1	0	1	0.5	1.1	1.6
0	0	1	0	0	1	1	1	0	1	0	0	1	1	1	1.5	1.6	2.1
1	1	0	0	0	0	1	1	1	0	0	0	0	1	1	0.5	—1.9	—4.4
1	0	1	1	0	0	0	1	1	0	0	1	1	1	0	—1.5	0.7	3.2
0	0	1	1	0	0	0	1	1	1	1	0	0	0	1	—1.5	—2.6	—4.1
1	0	0	1	0	1	1	0	1	1	0	1	0	0	1	4.5	—0.5	8.0
0	1	1	1	0	0	1	0	0	0	0	1	1	0	1	1.5	0.8	4.3
0	1	1	0	1	0	0	1	0	0	1	0	1	1	0	—4.5	1.3	—2.2
1	1	0	1	0	1	0	1	0	0	1	0	1	0	1	—2.5	—1.2	1.3

TABLE 2-12 Analysis of variance in RACOFFD

2nd group

Parameters	S. S	D. F	M. S	F_0	Value of β_r	$\hat{\beta}_r$
1	1.16	1	1.16	0.14	0	—0.19
2	0.69	1	0.69	0.08	0	—0.15
3	2.26	1	2.26	0.26	0	0.27
4	0.63	1	0.63	0.07	0.5	0.14
5	0.30	1	0.30	0.04	0.5	—0.10
6	31.80	1	31.80	*3.71	—0.5	—1.00
7	7.51	1	7.51	0.88	—0.5	—0.48
8	0.05	1	0.05	0.01	0.5	0.04
9	2.05	1	2.05	0.24	0	0.25
10	1.32	1	1.32	0.15	—0.5	—0.20
11	16.10	1	16.10	*1.88	0.5	0.71
12	69.92	1	69.92	*8.16	—1	—1.48
13	0.58	1	0.58	0.07	0.5	0.13
14	2.59	1	2.59	0.30	0	0.28
15	12.13	1	12.13	1.42	—0.5	0.62
error	137.17	15	8.57	$\sigma_1^2+\sigma_2^2=6.50$		
total	286.26	32				

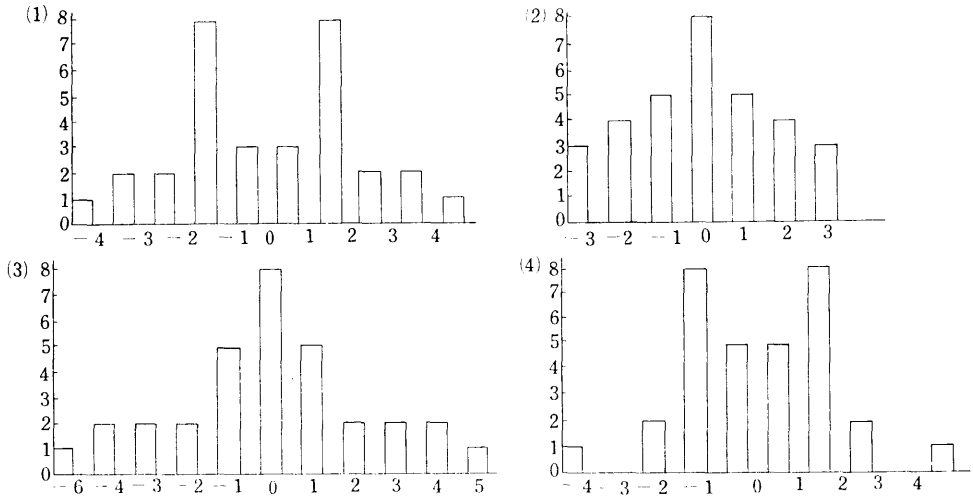

FIG. 2-10 Finite populations in our synthetic models

where

$$x_0 = \frac{\nu_p k_p^{-1} F_\phi^1(\alpha_0)}{\Phi + \nu_p\, k_p^{-1} F_\phi^1(\alpha_0)}$$

$$\nu_p = \frac{(1+2\tau_p)^2}{1+4\tau_p} \quad ,$$

in which $\quad k_p = 1+2\tau_p \ , \ \tau_p = N\alpha_p^2/2(1+\mu_2)$.

In the example of the models, we have finite populations as a noisy effect in our synthetic models in the Fig. 2–10, in which populations (1), (2), (3) and (4) are corresponding to the synthetic populations, the (1) which is given in the 17th column ζ_n of Table 2–7, the (2) given in the 3rd column from the last v_n of Table 2–7, the (3) given in the 17th column ζ_n of Table 2–10, and the (4) given in the 3rd column from the last v_n of Table 2–10, Then we can get the asymptotic power of test, which are given by

for	1st	2nd	3rd	4th	analysis variance table
$\tau_p =$	4.34	2.78	3.76	2.46	for $\alpha_p \mid = 1.0$
$=$	1.08	0.70	0.94	0.62	for $\alpha_p \mid = 0.5$

and the 2nd kind of error in the following table for $\Phi = 15$ and $\alpha_0 = 0.20$.

Furthermore, the estimates of the parameters are given in the last columns in the analysis of variance tables. From these, it can be observed that the estimates of the parameters in the RACOFFD methods are distributed in a wide range.

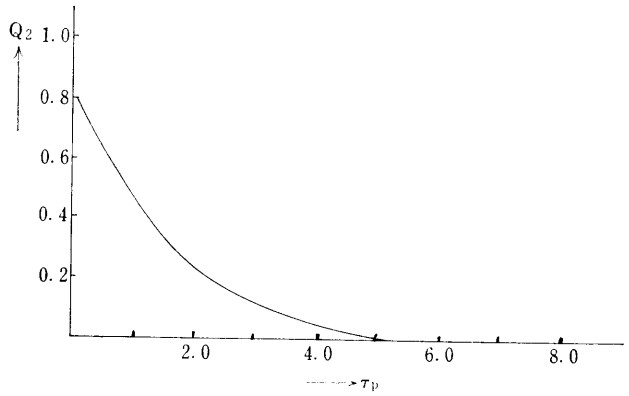

FIG. 2-11 The 2nd kind of error for $\Phi=15$ and $\alpha_0=0.20$

Acknowledgements

The author expresses his gratitude to Professor Kitagawa for his helpfull guidance of full course of this research and kind encouragements. His gratitude is also due to Dr. Shimada for his helpfull suggestions and kind encouragements, and also due to many members of Kasado Works, Hitachi Ltd. for practical applications of this RACOFFD method and carrying through a large scale numerical computation.

References

[1] Anscombe, F. J.; *Quick analysis methods for random balance screening experiments*, Technometrics **1** (1959), 195-209.

[2] Bancroft, T. A.; *On bases in estimation due to the use of preliminary tests of significance*, Ann. Math. Statist. **15** (1944), 190-204.

[3] Box, G. E. P. and Behnken, D. W.; *Simplex-sum designs ; a class of second order rotatable designs derivable from those of first order*, Ann. Math. Statist. **31** (1960) 834-864.

[4] Box, G. E. P. and Hunter, J. S.; *Multi-factor experimental designs for exploring response surfaces*, Ann. Math. Statist. **28** (1957), 195-241.

[5] Box, G. E. P. and Hunter, J. S.; *The 2^{K-P} fractional factorial designs Part I*, Technometrics **3** (1961), 311-351.

[6] Box, G. E. P. and Hunter, J. S.; *The 2^{K-P} fractional factorial designs Part II*, Technometrics **3** (1961) 449-458.

[7] Bozivich, H., Bancroft, T. A. and Hartley, H. O.; *Power of analysis of variance test procedures for certain incompletely specified models I*, Ann. Math. Statist. **27** (1956), 1017-1043.

[8] Brooks, S.; *Comparison of methods for estimating the optimal factor combination*, Thesis approved for the degree of doctor of Science in Hygience (April-1955).

[9] Budne, T. A.; *The application of random balance designs*, Technometrics **1** (1959), 139-155.

[10] Dempster, A. P.; *Random allocation designs I*: On general classes of estimation methods, Ann. Math. Statist. **31** (1960), 885-905.

[11] Dempster, A. P.; *Random allocation designs II*: Approximate theory for simple random allocations, Ann. Math. Statist. **32** (1961), 378-405.

[12] HOOKE, R.; *Symmetric function of a two-way array*, Ann. Math. Statist. **27** (1956), 55-79.

[13] HOOKE, R.; *Some applications of bipolykays to the estimation of variance components and their moments*, Ann. Math. Statist. **27** (1956), 80-98.

[14] KITAGAWA, T.; *Successive process of statistical inferences*, Mem. Fac. Sci. Kyushu University, Series A, **15** (1950) 139-180.

[15] KITAGAWA, T.; *The lecture of design of experiments I* Baifukan (1955) 1-335 (in Japanese).

[16] KITAGAWA, T.; *Successive process of statistical inferences*, Applied Mathematics Colloquium, Series B, 10a, Iwanami (1958), 1-121.

[17] KITAGAWA, T.; *Successive process of statistical inferences applied to linear regression analysis and its specializations to response surface analysis*, Bull. Math. Statist., **8** (1959), 80-114.

[18] KITAGAWA, T.; *Estimation after preliminary tests of significance*, Univ. Calif. Pub. in Statist. **3** (1963), 147-186.

[19] MANN, H. B.; *Analysis and design of experiments*, Dover Pub., Inc., (1949), 1-77.

[20] MORIGUCHI, S.; *Statistical Analysis*, Applied Mathematics Colloquium, Series B. 10b, Iwanami (1958), 1-94.

[21] PATNAIK, P. B.; *The non-central χ^2- and F-distributions and their applications*, Biometrika **39** (1949), 202-232.

[22] PAULL, A. E.; *On a preliminary test for pooling mean squares in the analysis of variance*,. Ann. Math. Statist. **21** (1950), 539-556.

[23] PEARSON, K.; *Table of the incomplete beta-function*, the Biometrika office, London, (1948), 1-494.

[24] PLACKETT, R. L. and BURMAN, J. P.; *The design of optimum multifactorial experiments*, Biometrika, **33** (1946), 305-325.

[25] SATTERTHWAITE, F. E.; *Random balance experimentation*, Technometrics **1** (1959) 31-54.

[26] SHIMADA, S.; *Introduction to stochastics* (1955) Denki-Shoin, (in Japanese)

[27] TAGUCHI, G.; *Design of experiments I.* (1957) Maruzen (in Iapanese)

[28] TAGUCHI, G.; *Design of experiments II*, (1957) Maruzen, (in Japanese)

[29] TAKEUCHI, K.; *On a special class of regression problems and its apptications*; *Random combined fractional factorial designs*, Rep. Statist. Appl. Res. J. U. S. E., **7** (1960) 167-198.

[30] TAKEUCHI, K.; *On a special class of regression problems and its applications*; *Rondom combined fractional factorial designs*, (*continued*) *Part II The case for $r \geqq 3$*, Rep. Statist. Appl. Res. J.U.S.E. **8** (1961), 1-6.

[31] TAKEUCHI, K.; *On a special class of regression problems and its application*; *Some remarks about general models*, Rep. Statist. Res. J. U. S. E., **8** (1961), 7-17.

[32] TUKEY, J. W.; *Some sampling simplified*, Jour. Amer. Statist. Assoc., **45** (1950), 501-519.

[33] TUKEY, J. W.; *Keeping moment-like sampling computations simple*, Ann. Math. Statist. **27** (1956) 37-54.

[34] YAMAKAWA, N.; *Random combined fractional factorial designsII* : *Sampling theory from the finite populations*, submitted for publication in the Bull. Math. Statist.