九州大学学術情報リポジトリ
Kyushu University Institutional Repository

A Development of Joint Mechanism of Robot Arm Based on Human Shoulder Mechanism

Sakai, Nobuo
Department of Intelligent Machinery and Systems : Graduate Student

Murakami, Teruo
Department of Intelligent Machinery and Systems : Professor

Sawae, Yoshinori
Department of Intelligent Machinery and Systems : Associate Professor

https://hdl.handle.net/2324/1106

出版情報：九州大学工学紀要. 61 (4), pp.123-138, 2001-12-20. 九州大学大学院工学研究院
バージョン：
権利関係：

Memoirs of the Faculty of Engineering, Kyushu University, Vol. 61, No. 4, December 2001

A Development of Joint Mechanism of Robot Arm Based on Human Shoulder Mechanism

by

Nobuo SAKAI*, Teruo MURAKAMI** and Yoshinori SAWAE***

(Received September 26, 2001)

Abstract

The human shoulder joint is constrained by the plural number of muscles and ligaments which surround ball joint, and is driven by the balance of those forces. It is thought that the construction of human shoulder could realize the motion with 3 degrees of freedom as a joint of compact size and light weight in comparison with industrial robot arm which was composed of usual pin joints. Therefore, the authors thought that the new joint mechanism of the robot arm with 3 degrees of freedom in compact size and light weight should be realized in ball joint mechanism driven by wires. In the new joint mechanism, anatomical skeltal structure and muscle arrangement were introduced. The movability of the new mechanism was evaluated by the moment arm produced by wires. And, to improve the deficiency of moment arm, in some flexion-extension and rotation, the corresponding wire position was adjusted on the basis of the evaluation of the moment arm. Thus, the effective movability was ascertained in scheduled movable area on 6 wire's model. Though inverse kinematics should be solved when the new shoulder joint is driven as a robot arm, in this paper this was solved by making it learn on the inverse kinematics in artificial neural network (ANN). To improve ANN learning inverse kinematics of the mechanism precisely, the receptive layer was incorporated in ANN. The joint was properly driven by learned ANN, and the capability as a joint mechanism was demonstrated.

Keywords: Bionic design, Biomimetics, Shoulder joint, Neural network, Robot arm

1. Introduction

The human shoulder joint is composed of a scapula, a clavicle, a humeral and a body

*Graduate Student, Department of Intelligent Machinery and Systems
**Professor, Department of Intelligent Machinery and Systems
***Associate Professor, Department of Intelligent Machinery and Systems

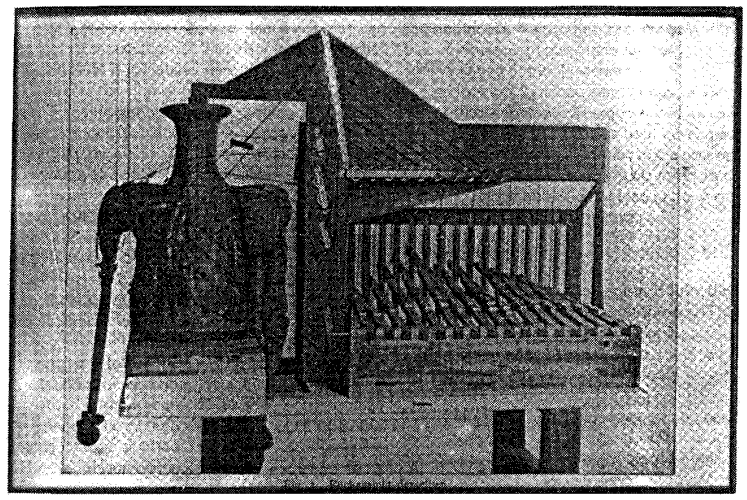

Fig. 1 An old physical model of shoulder joint mechanism called 'Shoulder Organ' by Mollier(1899). This model can be driven by pressing the keyboard which is linked to joint by wires corresponding to contracting muscles[1].

trunk, and is called upper girdle. It is said that a shoulder is the joint whose range of motion is the largest in the human joint. The various analyses of the shoulder joint mechanism have been conducted. One of old example is the physical model 'Shoulder Organ' made by Mollier in 1899 shown in **Fig. 1**. As for the shoulder joint, research is advanced as the application for the surgical operation of shoulder joint reconstruction and design index of the artificial joint from especially clinical and medical viewpoint. The FEM modeling[1] and modeling by mathematical formula[2] have been studied together with the analysis of anatomy[3].

The human shoulder upper limb has 7 degrees of freedom (Shoulder : 3, elbow : 2, hand : 2). A ball joint exists between the scapula and humeral, and the movement of 3 degrees of freedom is realized by the system driven with the plural muscles which surround it. This structure succeeds in managing a upper limb to work as a light weight by putting degrees of freedom of upper limb together. And, a joint part itself is compact because major several muscles group for the drive is extended from the body trunk. These advantages are the requirement to realize high adaptability toward the various work, and the research of this shoulder joint mechanism can be applied to not only the clinical application but also the application to the robot arm mechanism.

The authors think that the compact structure in light weight is necessary for the human care robot used at a scene to coexist with the person in comparison with the usual robot for the industry. As for other groups as well, the development studies of the robot which kept these properties have been carried out[4)5)6)].

In the general industrial robot arm, multiple degrees of freedom are acquired by putting pin joints and linear slide mechanism together. On the other hand, a human joint part is compact because a joint is composed of the curved surfaces which permit multiple degrees of freedom in a single joint driven by the muscles.

Most of researches on the analysis of the shoulder joint mechanism are related to a balance of the force about the specific posture and the specific planar movement. Therefore, the model that can be applied for a robot arm shoulder joint of large range of motion and 3 degrees of freedom has not yet been developed.

The authors paid attention to the fact that human shoulder joint has the mechanism that realizes the smooth motion of 3 degrees of freedom in compact size and light weight by the ball joint. The aim of this study is the development of the joint mechanism of the robot arm

in which wires drive the ball joint. The construction of the muscles and the bones in the anatomical structure was modeled as a joint mechanism of the robot arm, and the experimental machine which could work as a joint mechanism was made and evaluated with the actual driving test. A temporary coordinate in consideration of the problem (CODMAN'S PARADOX - about the coordinate problem when 3 degrees of freedom motion was made in a single joint) was defined, and the learning of geometrical inverse kinematics in the artificial neural network (ANN) was conducted to drive it as a robot arm. The experimental result on sufficient movability of new joint mechanism as a robot arm is shown.

2. The development of the shoulder joint based on human shoulder mechanism

2.1 The construction of the anatomical human shoulder mechanism

A human shoulder joint is a part of endoskelton, and it is composed of three bones, plural muscles and ligaments[7]. The typical muslculo-skeltal construction of a shoulder joint is shown in **Fig. 2**. A frame is driven by a balance of the forces by synergistic and antagonistic actions of those muscle groups. For some muscles such as the Pectoralis major and Deltoid which have large width and thickness, the local part of muscles can act separately.

2.2 The construction of the joint mechanism of the robot arm

A living body has redundancy about the number of the muscle. Therefore before composing a joint mechanism of the robot arm based on the anatomical construction, important muscles should be chosen from those muscles group, which is replaced by the corresponding wire. The existing modeling for the usual clinical use is mainly applicable for the specified position and movement and not appropriate for this study. The basic idea in this study is that 6 wires are necessary to drive a ball joint in 3 degrees of freedom, because 2 wires are required to drive a pin joint of a degree of freedom. Therefore, 6 wires model was developed in this study, although 6 wires are not always arranged in single antagonistic position. That is, Supraspinatus, Teres minor, Lattisimus dorsi, Anterior Deltoid, Subs-

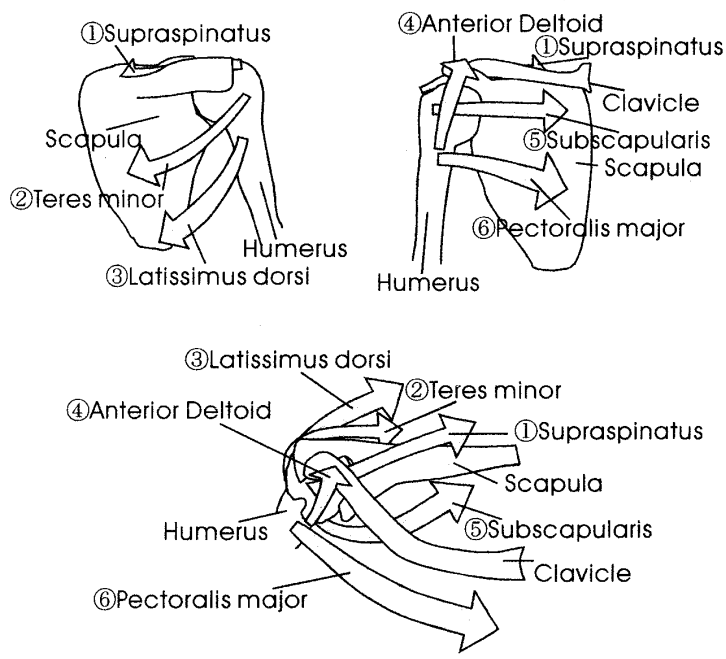

Fig. 2 Musculo-skeletal model of the human glenohumeral joint[7]. (The Physiology of the Joints, L.A.Kapanji, 1982)

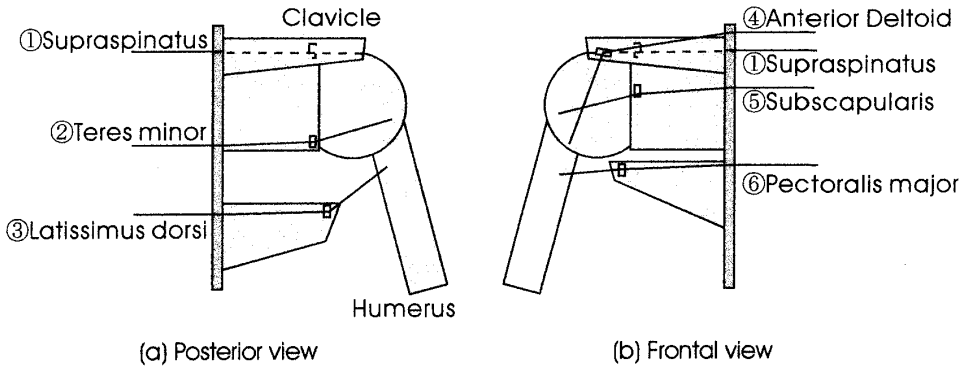

Fig. 3 Musculo-skeletal model of the robot arm in 6 wires model.

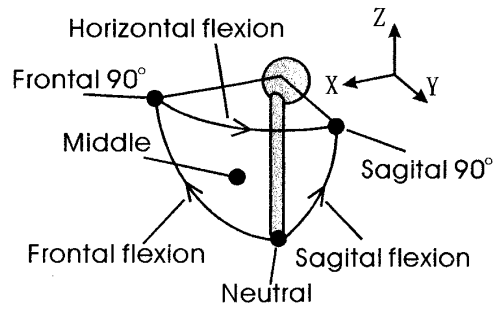

Fig. 4 View of the arm movement.

capularis, Pectoralis major were selected as important muscles. Wire arrangement in six wires model is shown in **Fig. 3**.

2.3 Configuration of the range of motion

A human shoulder joint extends the range of motion due to the sliding motion between the scapula and the body trunk area in addition to the relative movement between the scapula and the humeral. Before composing such a robot arm joint mechanism as a human shoulder joint, the evaluation region of movement was set up in 1/8 of the sphere, i.e., the range from 0 to 90 deg for frontal flexion, 0 to 90 deg for sagital flexion and 0 to 90 deg for horizontal flexion, which is the main movement area of the ball joint in the human body (**Fig. 4**). And, a rotation range around the axis of the arm was confined within 90 deg. A Neutral position was defined as the location where the arm was aligned in the gravity direction.

2.4 The experimental construction of the robot arm joint mechanism

The schematic figure of the experimental joint mechanism of a robot arm is shown in **Fig. 5**. The diagram of the control is shown in **Fig. 6**, and the photograph is shown in **Fig. 7**. The experimental machine is composed of a joint part, pulleys for the wire movement measurement, a guide plane for the arm angle detection, a three dimensional position sensor for the arm trajectory capturing, motors for the wire drive and a computer for the control. A rotator ball (a humeral bone head) is a true sphere of the acrylic resin and its diameter is 50mm. A concave cuff (scapula acetabular side) was made from polyacetal, and it was prepared as a concave sphere of 51mm in diameter. The circular opening of cuff has diameter of 45mm. The moving part of arm is a part equivalent to the humeral bone in human body, and is the acrylic plastic bar of 165mm in length and 15mm in diameter. The position of the bar was shifted as 7.5mm from the center of the ball. Interference between the cuff and the arm bar was prevented by this arrangement at the Neutral posture. As for the arm mass, a movable part is 172g. A flexible stainless steel wire of 0.42mm in diameter

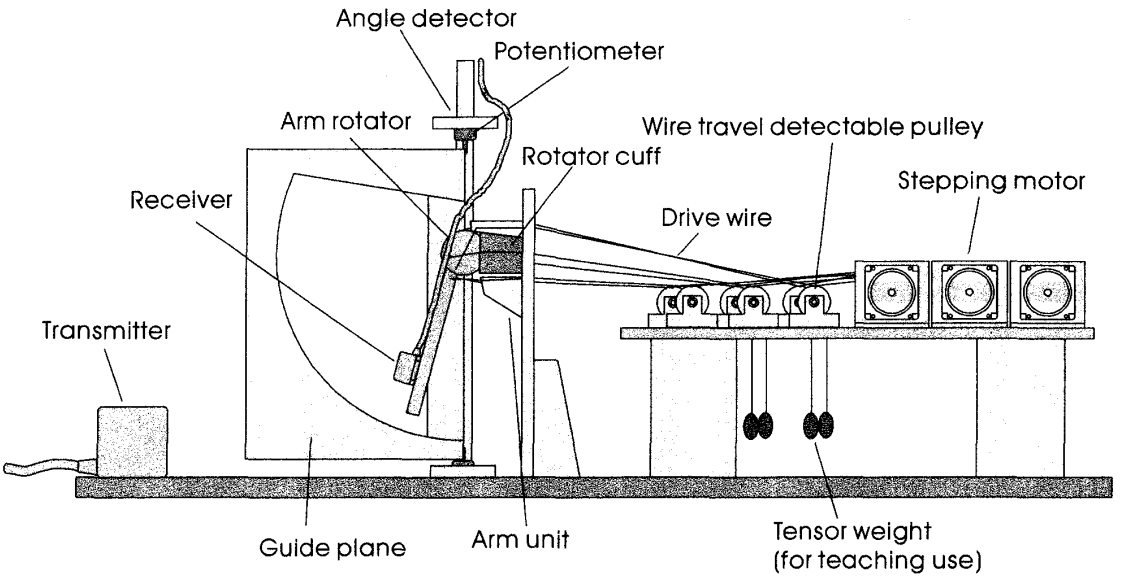

Fig. 5 Experimental model of the shoulder mechanism of the robot arm.

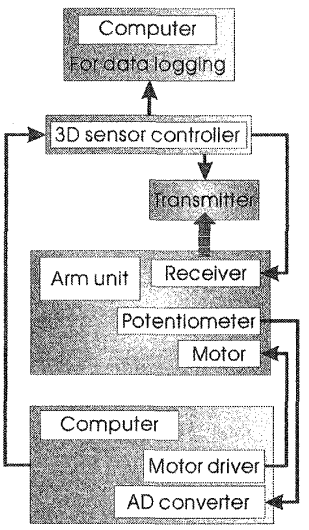

Fig. 6 The diagram of control instruments.

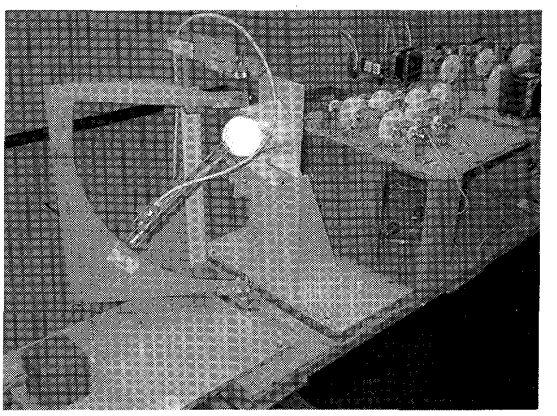

Fig. 7 Photograph of the experimental instruments.

was used for the wire as a replacement of muscle. The wires arranged in the surroundings of the ball joint are pulled through the pulleys in which a measurement vessel for wire travel detection was attached. The pulley is driven by a pulse motor. The voltage signal from potentiometer for wire travel detection is sent to the control computer by an AD converter. And, the posture of the arm and corresponding angle are measured using the three-dimensional positioning sensor (Polhemus Incorporated, 3 Space FASTRAK) in which modulation in the signals based on electromagnetic was estimated at the precision of 0.1mm and 0.1 deg at the rate of 120Hz to measure the trajectory of the moving part. It was ascertained in advance that a circumferential metallic parts and motors did not influence the measurement precision about the magnetic sensor.

3. Movement evaluation

3.1 Movement evaluation based on the moment arm

The effective movement of the joint mechanism was evaluated by the moment arm

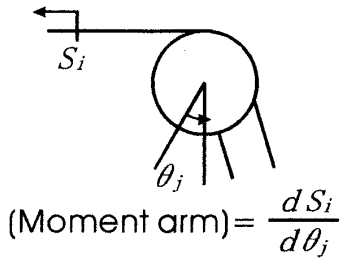

Fig. 8 Method to estimate a moment arm.

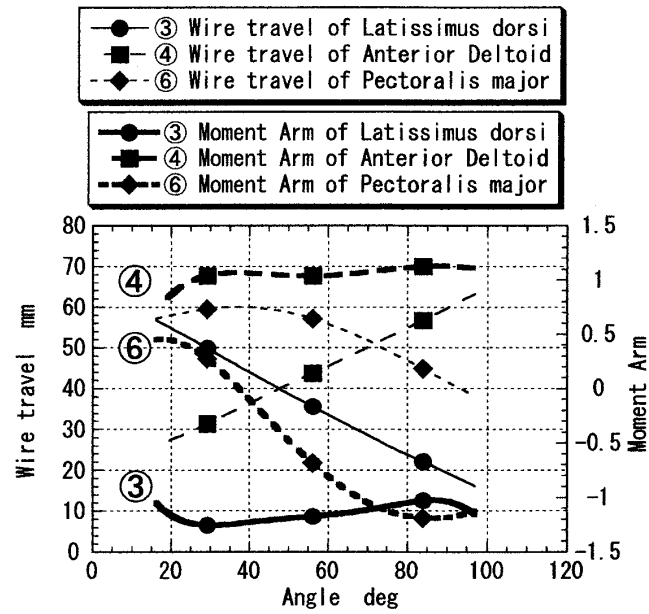

Fig. 9 Measured wire travel and corresponding moment arm during sagital flexion on 6 wires model.

length which was assigned on the ball joint part by the wire as a driving element. First, each wire movement S_i (i=1-6) was measured when a joint mechanism was manually moved by the arm. The measured data were made to fit the polynomial on the order of sixth. The polynomial regression was analytically differentiated in the flexed angle θ_j to give the instantaneous moment arm, i.e. the slope of the excursion vs joint angle relationship was calculated (**Fig. 8**). And these data were turned further to the dimensionless value divided by the radius of the ball joint head. In other words, when the dimensionless moment arm length is 1, a wire has the moment arm length of the equivalent length to the radius of the rotator ball. For evaluation of the moment arm, the load of 0.73 N was applied to each wire. The dimensionless moment arm length and the wire travel in Sagital flexion is shown in **Fig. 9**. In this movement, ④Anterior Deltoid and ③Lattisimus dorsi are acting on the master of the moment arm, and these two wires express an antagonistic to the dimensionless moment arm length in the whole area in the graph, Anterior Deltoid having the value of about 1 and Lattisimus dorsi having -1. It is said about Pectoralis major that the moment arm is effective for the flexion motion at less than about 35 deg and for extension motion at larger than 35 deg in Sagital flexion movement in the living human body. As for this experimental machine as well, the same result is shown by ⑥Pectoralis major in **Fig. 9**. In another way of saying, the wire corresponding to a Pectoralis major works to enhance a moment arm to restore to the former position as the position leave apart from the position of 35 deg. When the dimensionless moment arm grows up more than the value of 1, a wire does not enwind itself around the ball of the joint part, but passes in the straight line-shaped.

3.2 Rearrangement of wire position

The muscles of the living body has thickness and distribution, but the number of the wire is restricted as 6 in this experimental model of the joint mechanism. As for the early arrangement of the wire, there are the ranges in which the moment arm is too less for effective motion. Therefore, the rearrangement of wire position was required. So, when a moment arm length to the specific movement in the early arrangement of the wire was too small, a wire adhesion position and a passage hole were adjusted from the original position

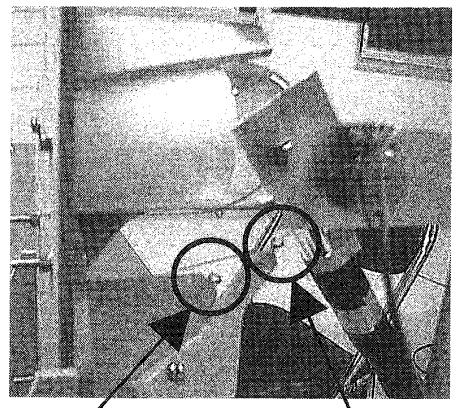

Fig.10 Photograph of the passing hole of the wire corresponding to Lattisimus dorsi in improving process.

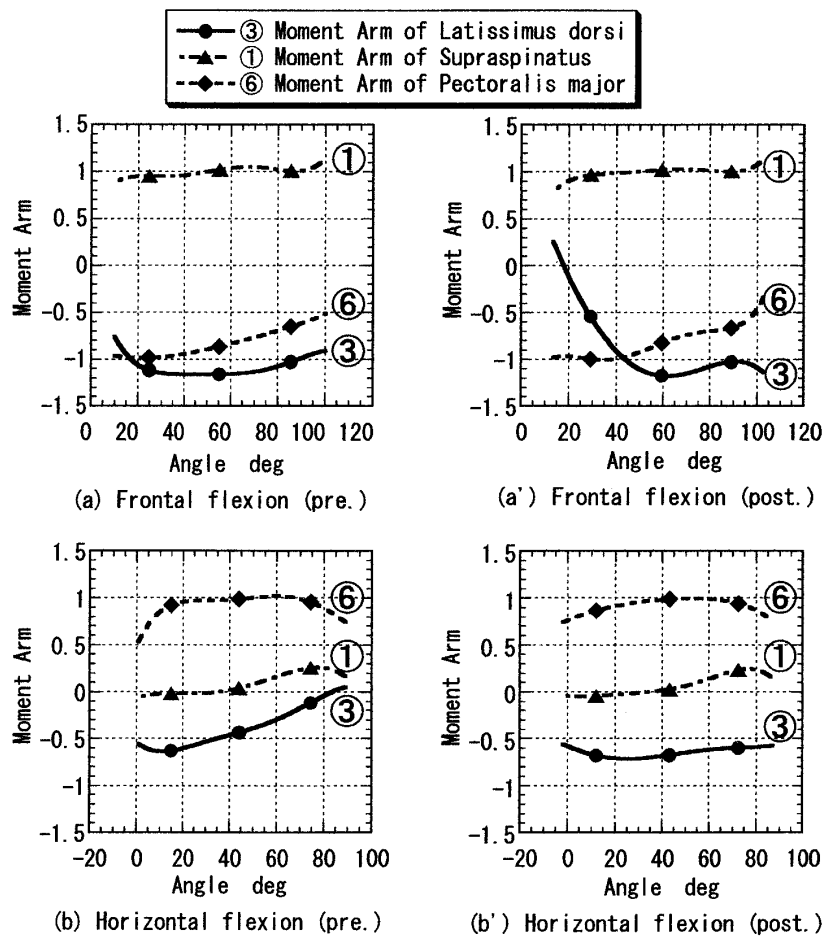

Fig.11 Measured moment arm of the each movement in improving process on 6 wires model.

to the proper position at which a moment arm length has been fully secured, and then a new moment arm was evaluated. A moment arm evaluation was done along the circumferential path of the movement at which it is the most hard to drive. **Figure 10** is an example in which the passage hole of the wire as Lattisimus dorsi was adjusted. Because Lattisimus dorsi is attached to the body trunk in human body, in an early model a passage hole was arranged on the surface of the joint. A moment arm was ensured in both flexion and extension side as shown in Frontal flexion (pre.) in **Fig.11(a)**. But, when Horizontal flexion (**Fig.11(b)**) was done, a moment arm length which acts as the extension moment arm in the area beyond 35

deg became less than 0.5. In this case, even if it can be fully flexed, an arm can not be returned to the inceptive position as for extension movement. Though Posterior Deltoid is in charge of this movement in human body, this is not equipped with six wires model in limitation of the wire number. So the passage hole of Lattisimus dorsi was moved in the outward direction as shown in **Fig.10**. Thus, a moment arm for extension was improved to the value shown further in **Fig.11(b')**. Because ③Lattisimus dorsi was used on this model for Frontal flexion as well, its moment arm length for extension was lower than **Fig.11(a)** in the area of 30 deg and less than 0.5. But, the sum of the moment arm is secured because a ⑥ Pectoraris major is acting on this movement at the same time, too.

3.3 Evaluation of Rotation

Every wire is concerned with the drive of 3 degrees of freedom of arm movement. Therefore, the moment arms for other motions of 2 degrees of freedom were decreased at the same time when the moment arm of a certain specific movement is improved. So it is required to distribute the moment arm of each wire appropriately to each movement by recursive improving processes of 6 wires model. Rotation in this model depends mainly on antagonistic work with ②Teres minor and ⑤Subscapularis so that two muscles which correspond with these are arranged in the position to wrap symmetrically around the humeral head in human body. A moment arm about the rotation should become the largest in the middle position. And, wires about the flexion were arranged so that a moment arm might be kept as effective when the arm moves along circumference of movement area. The changes in the dimensionless moment arm length of the rotation movement about the arm axis at 4 position indicated in **Fig. 4** (the four ● marks) are shown in **Fig.12**. The largest

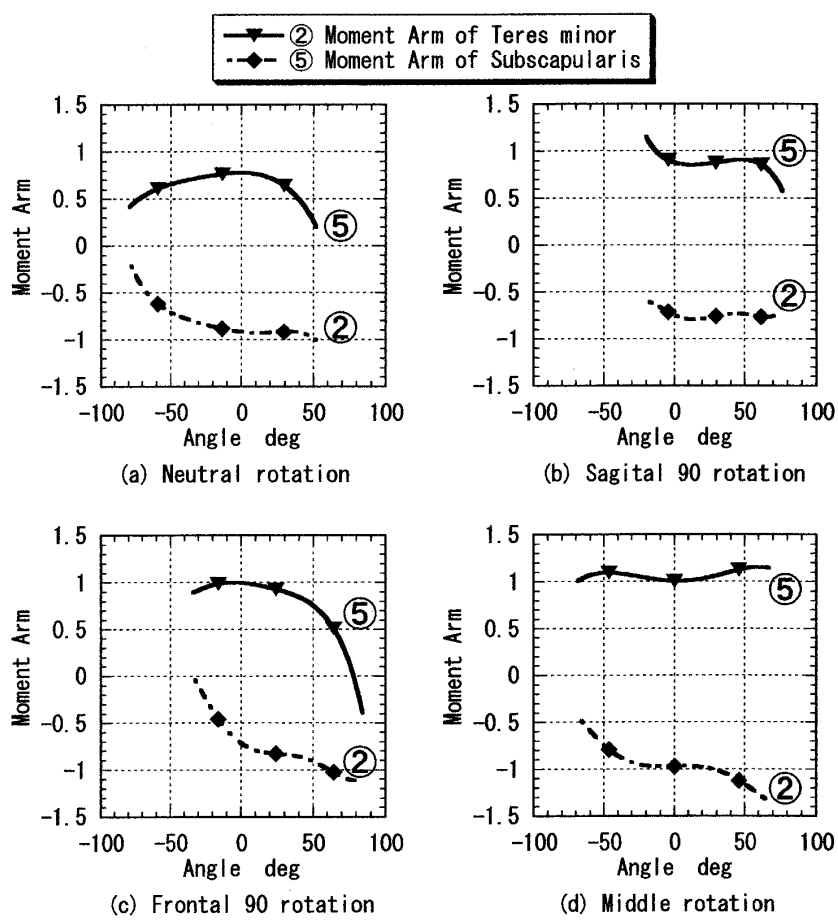

Fig.12 Measured moment arm concerning to the rotation on 6 wires model.

moment arm is ensured about the spinnation and pronation at the Middle position as required in designed concept. Though the moment arm at other 3 points decreased from the Middle position, each moment arm length beyond 0.5 was secured in the rotation range beyond 90 deg.

3.4 The joint mechanism in the final 6 wires model

It was judged in this paper that the movability of the arm was effective if the sum of the moment arm length as a dimension-less value was secured beyond 0.5 in the whole area of the arm movement territory shown in **Fig. 4**. The summarized data for the effective index about the 6 wires are shown in **Table 1** for flexion-extension of the arm in each movement of **Fig. 4** and pronation-spination on each position. "◎" shows a moment arm length of a dimension-less value beyond 0.75 in the whole area of the movement territory, "○" indicates more than 0.5 in a part of the movement area. "△" is involved with the moment arm length of 0.5 and less than 0.5 in the specific movement area "−" means that a wire is loosen in almost all ranges. For all flexion-extension and rotation, it is noticed that there are two "◎" or one "◎" and more than two "○". It is understood that a moment arm is appropriately distributed in the whole movement from the table.

Position from the center of the ball is shown about the wire attaching position and the passage hole at the Frontal flexion 21 deg posture in **Fig.13**. A sign "A" is the passage hole position of Lattisimus dorsi in the early model stated in the paragraph 3.2. The details related to each wire are described in the following.

①Supraspinatus

The action of the Middle Deltoid in human body is included in Supraspinatus for Frontal flexion. Because the attached position of this wire was arranged to the outward face of the ball, it is in charge of the spination motion as well in this arrangement by wrapping itself around the ball in Sagital 90 deg position.

②Teres minor

The muscle equivalent to this wire is attached to the humeral head, and wraps itself around this in human body. This mechanism is arranged in the same way, and it is in charge of the pronation motion. This wire is related to rotation by arranging it symmetrically about ⑤Subscapularis and antagonized. Because the other origin of the Teres minor muscle is attached to the scapula, a wire passage hole was arranged on the edge of the carrier side of the ball.

③Lattisimus dorsi

Though one end was the back of the body trunk in human body, a passage hole was arranged to the position where it was put off in the outward for Sagital extension. Only this wire was largely relocated from the arrangement "A" point of the human body as described

Table 1 Effective index of the wire and its relationship in each motion.

	Frontal		Sagital		Horizontal		Middle		Neutral		Frontal90		Sagital90	
	flex.	ext.	flex.	ext.	flex.	ext.	pron.	spin.	pron.	spin.	pron.	spin.	pron.	spin.
①Supraspinatus	◎	−	△	−	−	−	△	−	−	−	○	−	◎	−
②Teres minor	−	−	−	−	−	○	−	◎	−	◎	−	◎	−	◎
③Latissimus dorsi	−	○	−	◎	−	○	−	−	−	−	−	−	−	−
④Anterior Deltoid	○	−	◎	−	○	−	−	−	−	−	−	△	−	−
⑤Subscapularis	△	−	−	−	−	−	◎	−	◎	−	◎	−	○	−
⑥Pectoralis major	−	◎	△	○	◎	−	−	−	−	−	−	−	−	−

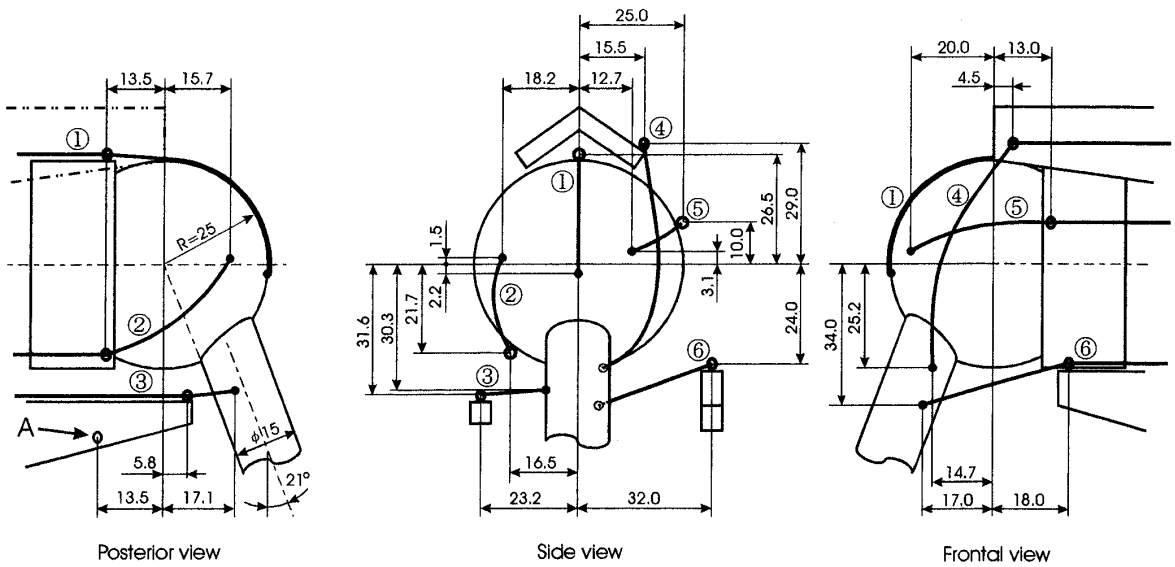

Fig.13 Projective figures of the joint, the wire origin and the wire passing hole.

in paragraph 3.2. An adhesion position on the arm side was fixed on a bar in the same way as the human body, and the dimension-less moment arm beyond 1 is gained.

④Anterior Deltoid

The muscle goes along the ball part of the frontal humeral head surface from the top of the forearm in human body. As to this mechanism, the wire goes along the spherical surface from the top of joint department to the frontal bar surface.

⑤Subscapuralis

This wire is in charge of the spination motion about rotation, and it antagonizes with ② Teres minor wire.

⑥Pectoralis major

Though one end has extent to the body trunk chest and attached to the human body, the wire was arranged in the passage route to the center of the extent of the muscle. A wire adhesion position was arranged on the bar part of the model in the same way as the human body.

A wire produces a moment arm on the joint part with wrapping itself around the ball so that the path becomes the shortest distance on a sphere in this mechanism. The wire moves on the spherical surface with causing a sliding during driving of this mechanism. Contact to the ball does not almost happen in the whole movement area with the wires ③Lattisimus dorsi and ⑥Pectoralis major which extend to the body trunk in the human body, and these wires are rectilinearly strained from the attached position to the passage hole. The wires of ④Anterior Deltoid and ⑤Subscapularis almost always touch each other, and the passage hole of Anterior Deltoid was arranged apart from the carrier part of the ball so that this wire is located at upper zone of the other.

4. The drive of the joint mechanism

4.1 The solution of the geometrical inverse kinematics

A study of the inverse kinematics becomes necessary when the joint is driven actually as a robot arm. A human motion is controlled by the neural network of the brain, and it is said that those part are learned as skill base in the cerebellum which is called the cerebellum perceptron theory. The geometrical inverse kinematics about the amount of posture-wire

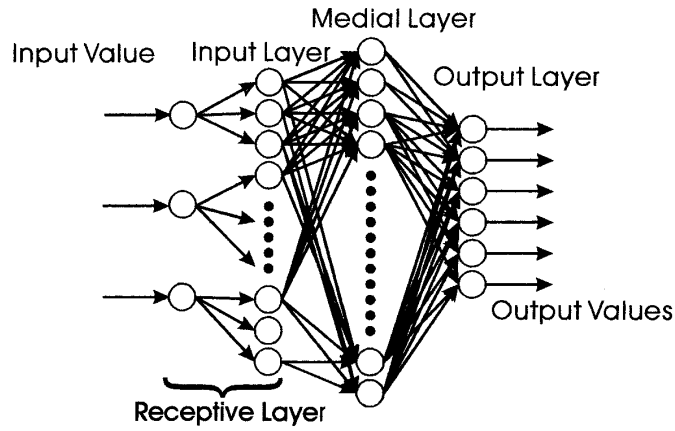

Fig.14 Architecture of artificial neural networks attached with receptive layer.

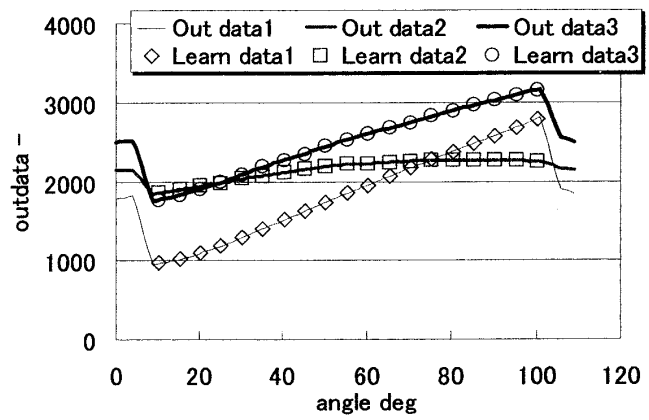

Fig.15 Neural Network learning data couple vs output data.

relationship of the arm was learned in ANN, and the robot arm was driven by using this method in this paper.

The ANN to be included into the control system must learn the geometrical composition in the high precision, and interpolate the set of data. When ANN learns this functional relationship, the learning process should prevent ANN from arising over-learning to maintain acceptable repeatability. So the Receptive Layer was composed as pre-process of the input value in front of Input Layer (**Fig.14**). Both the improvement of the pattern recognition by the binary input and compatiblility with the continuity of the analog input became possible by this. As for the distribution of the input value into Input Layer, the input value θ was normalized first. For assigning it to the Input Layer described

$$(x_1,\cdots,x_m,\cdots,x_t,x_{t+1},\cdots,x_n) \tag{1}$$

the corresponding input position with θ was chosen by using the formula

$$\begin{cases} \tilde{x}_t = \dfrac{t-1}{n-1} \\ \tilde{x}_{t+1} = \dfrac{t}{n-1}, \end{cases} \tag{2}$$

where the value to the Input Layer was determined by

$$\begin{cases} x_t = (n-1)(\tilde{x}_{t+1}-\theta) \\ x_{t+1} = (n-1)(\theta-\tilde{x}_t) \end{cases} \quad (\tilde{x}_t < \theta < \tilde{x}_{t+1})$$
$$x_m = 0 \qquad (\theta : other), \tag{3}$$

Usual feed forward type ANN was used for learning.

Data on the posture-wire relationship for learning were acquired from experimental machine, and the steepest decent method which make the difference vector from training error vector minimize was utilized to modify the inter-connective weight factor of ANN. Two input data on Spherical surface position information and a rotation angle in a temporary coordinate system to be stated in the next paragraph were used as an input value of ANN. ANN training was arranged to learn the gathering data of wire travel in moving the arm under the condition that a motor was separated from the wire system. Some parts of the learned output values and training data which are gathered from the experimental machine are shown in **Fig.15**. Learned data are appropriately precise within the range corresponding to training data.

4.2 Treatment concerning the center of the rotation and coordinate system

There is a limitation about the rotation range by each arm from the viewpoint of mechanism. The rotation center point is different depending on each position, because an arm end position changes as the position in a spherical surface in the area indicated with **Fig. 4**. When the angle system of usual yaw-pitch-roll is applied, the angle of roll should be thought to transform itself in the center position in the mechanism.

When a motion is done successively about spherical surface position, the conjunct rotation called CODMAN'S PARADOX happens. This is the nature in which the arm has 3 degrees of freedom in single joint. So, considering a rotation center position, the temporary coordinate system in which a calculation about the position and rotation was separated is introduced.

A polar region appears about coordinate, when the angle of yaw-pitch-roll is used about the spherical surface position. On the occasion that the arm end is near a polar region, it seems that the angle division for ANN training is too large about angle pitch from the viewpoint of ANN system. As for the interfacing the binary data of Receptive Layer, it is desirable to have the data of about 3 training data on the other hand. In such a case giving uniform width for data set, ANN turns fine with the precision, the learning computation time, the amount of teaching data, and the amount of memory as well. So, the calculation of a coordinate system was converted into the temporary coordinate system once about spherical surface position, and then ANN was managed to learn the training data about this coordinate system.

Establishing the coordinate system of the arm position, Angle1 was made to have the direction to Sagital 90 deg position like **Fig.16** from the medial point between the Neutral and Frontal 90 deg position in **Fig. 4**. **Figure 16** shows the coordinate which was seen from outside bottom to the center of the shoulder joint. In the same way the direction which went to Frontal 90 deg from the medial point between Neutral and Sagital 90 deg position was set up as angle2. The contour line which describes spherical surface position mesh was applied with SLERP (Spherical Linear intERPolation), for the line which interpolates on the surface of sphere. Learning of ANN is done efficiently because this coordinate system averages a mesh on the spherical surface when this angle system is applied. An initial position was set up on the intersection at which lines from each apex to a medial point on an opposed arc are met on the spherical surface. The angles at middle position of the arm posture which is indicated in **Fig. 4** are Angle1 = Angle2 = 35.2 deg on temporary coordinate system.

A coordinate about rotation which correspond with **Fig. 4** is shown in **Fig.17**. Shoulder coordinate is translated in parallel with Frontal 90 deg. The positive x-axis rotation is done inside at 30 deg in the movement while the arm end moves on the spherical surface from

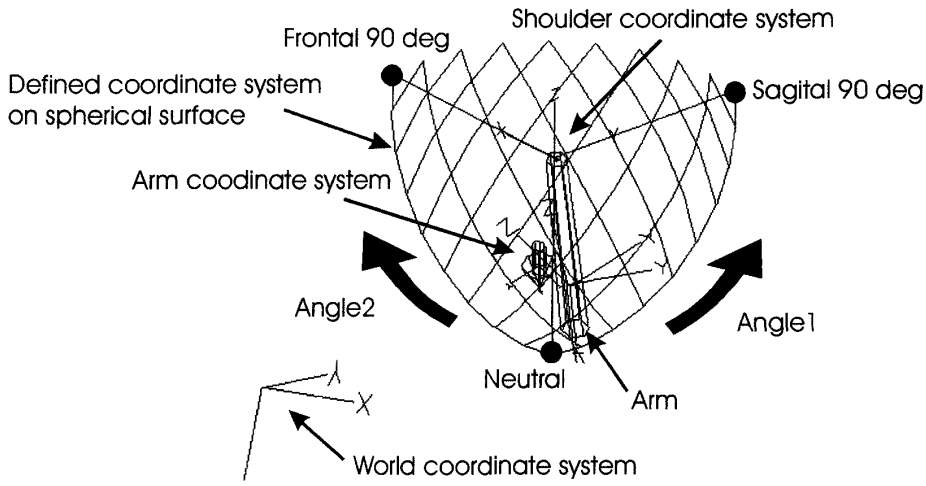

Fig.16 Description of the new defined coordinate system on spherical surface.

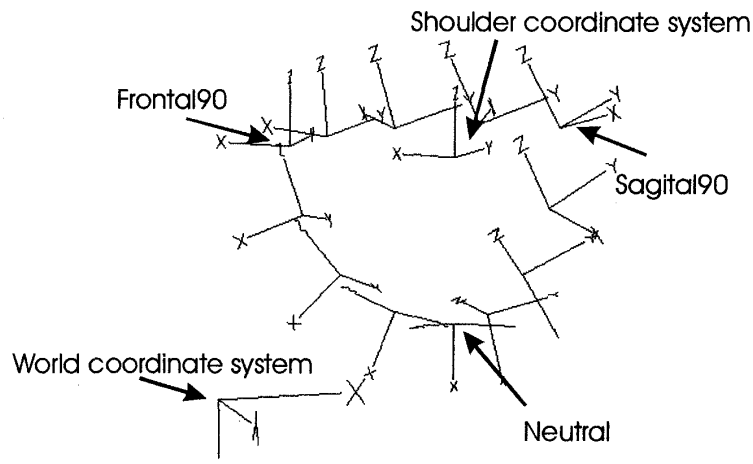

Fig.17 Description of coordinate system for the reference of axial rotation.

Fromtal 90 deg position to Sagital 90 deg. The positive x-axis rotation is done at 30 deg while it is moved next on the arc from Sagital 90 deg to the Neutral position. In the same way the positive x-axis rotation is done at 30 deg while it is moved from Neutral to Frontal 90 deg. A x-axis always maintains the vertical direction against the spherical surface with **Fig.17**.

CODMAN'S PARADOX is counteracted in this movement area by this resultant treatment. And, the coordinate was furthermore translated about the coordinate to become the mechanical center of the rotation range in the initial arm position of the former description. This coordinate was used an actual reference coordinate system about rotation. The rotation does not happen when the arm is moved from the initial position to the all radical direction under this definition.

Because a magnetic type 6 degrees of freedom position sensor was used, a rotation angle is found in the experimental arm as follows. A coordinate on an arm in the world coordinate is found at the formula:

$$^{w}T_{a-dash} = {}^{w}T_{r}\,{}^{r}T_{a}\,{}^{a}T_{a-dash} \tag{4}$$

where $^{w}T_{r}$ is the homogeneous transformation matrix from the position sensor, $^{r}T_{a}$ is the arm coordinate seen from the sensor one and $^{a}T_{a-dash}$ is rotational transform matrix about positive x-axis which was set up at initial position. The arm end position $^{s}\vec{P}$ is found from the shoulder coordinate, the reference coordinate about this position is

$$^{s}T_{a-ref} = Trans\,(^{s}\vec{P})\,Rot\,(\psi)\,Rot\,(\theta)\,Rot\,(\phi) \tag{5}$$

With $\psi = yaw$, $\theta = pitch$, $\phi = roll$ from shoulder coordinate. Just in this case, the angle

$$\begin{aligned} \phi_1 &= \psi/(\pi/2)\cdot(\pi/6) \\ \phi_2 &= (\phi_1 - \pi/12)\cdot(\theta/(\pi/2))\cdot 2 \\ \phi &= \phi_1 + \phi_2 \end{aligned} \tag{6}$$

are applied to formula (5) as the roll angle. The coordinate which could get it with (5) after this was translated into the world coordinate system, and a rotation angle was found by comparing this with (4).

5. Arm drive experiment

5.1 Experimental method of the arm drive experiment

A drive experiment was conducted in the actual machine to confirm a movability as the joint mechanism. ANN learned geometrical inverse kinematics for the drive, and supplied the wire displacement toward the target posture. As a geometrically restraint Parallel Link Mechanism, in this joint mechanism a posture is decided by only the wire displacement.

Wires are attached to the pulleys that are linked in the motor rotation. As for a motor controlling, a rotation speed was proportionally controlled toward the error from target wire displacement. Moreover, a acceleration was controlled in proportional toward target rotation speed of motor only at the time of the forward acceleration, and trajectory following control was done toward the amount of wire displacement. A control was made an open loop about the wire displacement quantity control, so the mechanism of the ball joint part itself was evaluated. The control related to the wire tension was not done in the experiment for the mechanical evaluation. The trajectory where it was driven was acquired by the three-dimensional position sensor installed at the position of 153mm from the center of the joint ball.

5.2 Experimental result of arm drive

The arm drive experiment was done by ANN which learned about 3 degrees of freedom in temporary coordinate system. Two experimental results which gave it a circular trajectory with period T=30 s and 10 s toward the spherical surface coordinate with keeping it in rotation of 0 deg from the initial posture are shown in **Fig.18** and **Fig.19**, respectively. A drive was done with the open loop control about the arm itself. Because both tests showed the same trajectory, it is considered that the deviation of the trajectory is due to a control in which the elasticity of the wire was not considered. A rotation deviation was 1.48 deg at the largest value.

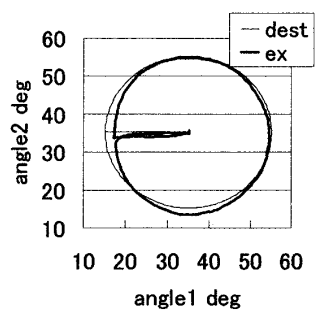

Fig.18 Trajectory of arm at low speed (T=30 s).

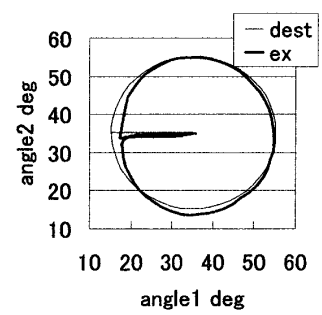

Fig.19 Trajectory of arm at high speed (T=10 s).

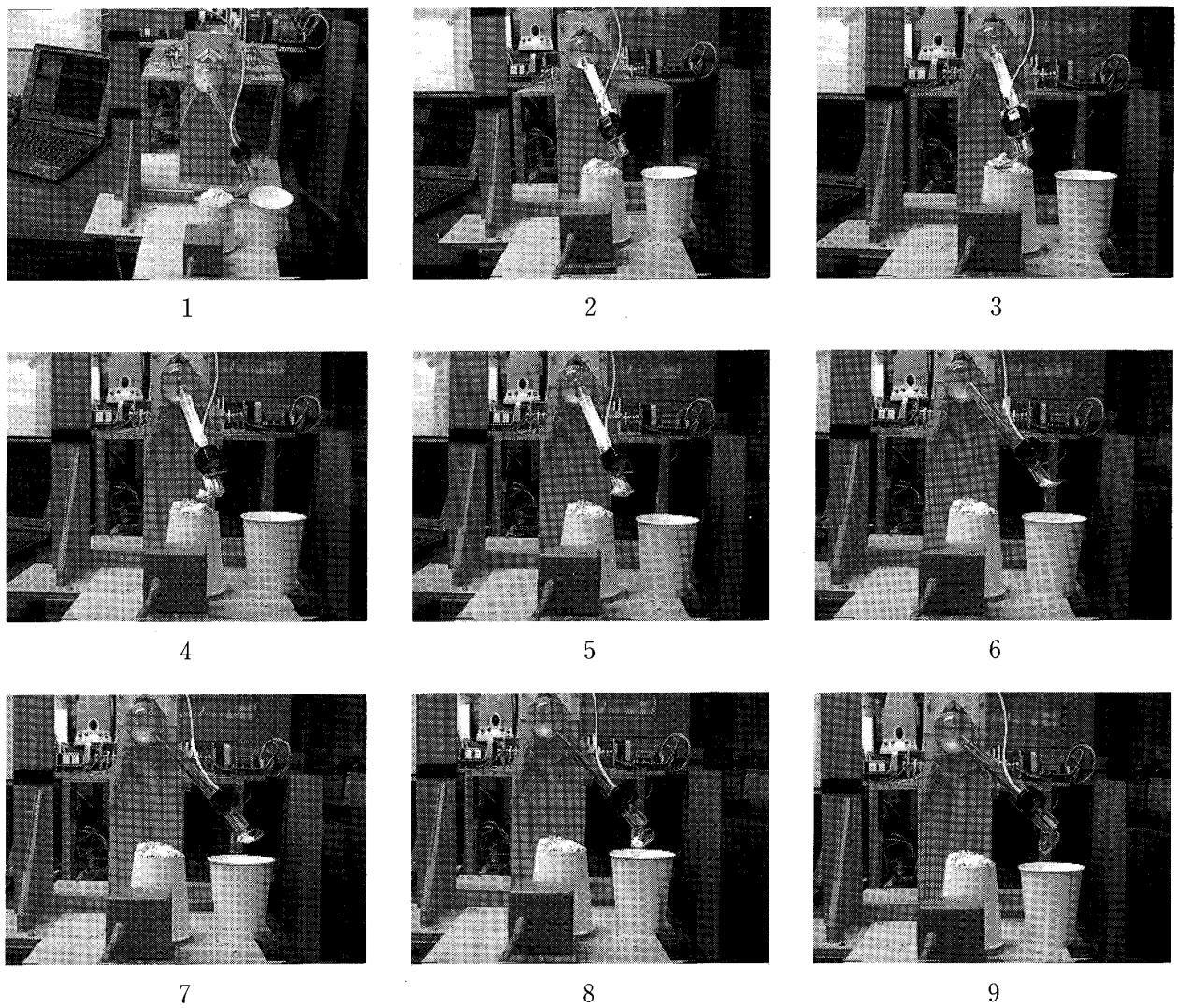

Fig.20 Sequence photographs of the task in which the powder scooped up with the spoon, and moved in another cup.

This arm mechanism can move about 3 degrees of freedom. Therefore, the powder can be scooped up with the spoon, and moved in another cup. The sequence photographs in this task are shown in **Fig.20**.

6. Discussion

It is shown in the experimental drive test for new robot arm based on human shoulder mechanism that this arm could be controlled for the motion of 3 degrees of freedom by the cooperative drive of wires. However, some errors occurred between an arm trajectory and a target trajectory. It is considered that these are caused by the elasticity of the wires and frictional force in this test where the arm was driven with the open loop. An arm should be controlled with taking wire tension into consideration. The friction force of the joint surface influenced an increase in the error greatly in this mechanism more than that it was expected because the summed force of the tension force of six wires was applied to the ball joint part. This high friction should be reduced by appropriate selection of the articulating materials of the joint such as ultra high molecular weight polyethylene and alumina ceramics used for artificial joint. The wire system also has high friction and hysteresis because a wire is bent sharply around passage hole. To solve this problem, it is necessary to study the flexible

material which has high strength and low friction property for wire, tendon and pulley. Though a smooth movement could be secured by repeating evaluation and re-arrangement, it must be examined to select an optimization technique as for the wire number and the way of arranging it. The prevention of the dislocation of the joint when the outer force was applied becomes possible by arranging the wire that was equivalent to the ligament.

It became possible that a wire passage position on the ball and sliding behavior were grasped in the actual instrument in this study. A study of differential inverse kinematics is introduced by making ANN which learned geometrical inverse kinematics having differential output. The improvement of precision in driving arm by the force control with feedback is scheduled to be reported by the next paper.

7. Conclusion

In this research on the basis of the fact that human shoulder joint realized three degrees of freedom in compact size with light weight it was tried to apply this structure as a new joint mechanism of the robot arm. So, the muscles and skeletal structure of the shoulder joint were applied to the joint mechanism in which wires drive the ball joint as a robot arm. The moment arm length that each wire could act on the joint part as an evaluation parameter of the test machine was measured, and a practical movability was ascertained by allocating wire arrangement to the suitable position on six wires model. Moreover, the arm could be smoothly driven by controlling the wire displacement with the application of solving geometrical inverse kinematics by ANN, and the possibility as a new joint mechanism was proved.

References

1) F. C. T. van der Helm, A Finite Element Musclo-skeletal Model of Shoulder Mechanism, J. Biomechanics 27 (1994), 551-569
2) J. E. Novoty, B. D. Beynnon, C. E. Nichols, Modeling the stability of the human glenohumeral joint during external rotation, J. Biomechanics 33 (2000), 345-354
3) R. E. Hughes, G. Niebur, J. Liu, K-N. An, Comparison of two methods for computing abduction moment arms of rotator cuff, J. Biomechanics 31 (1998), 157-160
4) Hiroshi ENDO and Mitsuo WADA, The coupled Tendon-driven System for Musculoskeltal Elbow Joints, J. Robotics Society of Japan vol.11 (1993), 1252-1260
5) Kazuhito HYODO and Hiroaki KOBAYASHI, A Study on Tendon Controlled Wrist Mechanism with Nonlinear Spring Tensioner, J. Robotics Society of Japan vol.11 (1993), 1244-1251
6) Takafumi NAKAYA, Toshio TSUTA, et.al, Cooperative and Space Manipulation of Flexible Biorobot Arm and Four Finger Hand System, The Japan Society of Mechanical Engineers Annual Meeting 2000, 461-462
7) L. A. Kapanji, The Physiology of Joints, Churchill Livingstone (1982)