九州大学学術情報リポジトリ
Kyushu University Institutional Repository

Solutions to a q-analog of Painlevé III equation of type D_7

Nakazono, Nobutaka
Graduate School of Mathematics, Kyushu University

Nishioka, Seiji
Department of Mathematical Sciences, Faculty of Science, Yamagata University

https://hdl.handle.net/2324/22099

出版情報：MI Preprint Series. 2012-7, 2012-06-19. 九州大学大学院数理学研究院
バージョン：
権利関係：

MI Preprint Series

Kyushu University
The Global COE Program
Math-for-Industry Education & Research Hub

Solutions to a q-analog of Painlevé III equation of type $D_7^{(1)}$

Nobutaka Nakazono
& Seiji Nishioka

MI 2012-7

(Received June 19, 2012)

Faculty of Mathematics
Kyushu University
Fukuoka, JAPAN

Solutions to a q-analog of Painlevé III equation of type $D_7^{(1)}$

Nobutaka Nakazono † *and Seiji Nishioka* ‡

† *Graduate School of Mathematics, Kyushu University, 744 Motooka, Nishi-ku, Fukuoka, 819-0395, Japan*
E-mail: *n-nakazono@math.kyushu-u.ac.jp*

‡ *Department of Mathematical Sciences, Faculty of Science, Yamagata University, 1-4-12 Kojirakawa-machi, Yamagata, 990-8560, Japan*
E-mail: *nishioka@sci.kj.yamagata-u.ac.jp*

Abstract. This paper deals with a q-analog of Painlevé III equation of type $D_7^{(1)}$. We study its algebraic function solutions and transcendental function solutions. We construct algebraic function solutions expressed by Laurent polynomials and prove irreducibility in the sense of decomposable extensions.

Keywords: q-Painlevé equation; q-difference equation; algebraic function solution; τ function; irreducibility
MSC 2010: 33E17; 34M55; 39A13

1 Introduction

In the 1900s, Painlevé equations, $\mathrm{P_I}$, $\mathrm{P_{II}}$, ... and $\mathrm{P_{VI}}$, are defined by P. Painlevé and B. Gambier. In the recent research, $\mathrm{P_{III}}$ was divided into three equations, $\mathrm{P}_{\mathrm{III}}^{D_6^{(1)}}$, $\mathrm{P}_{\mathrm{III}}^{D_7^{(1)}}$ and $\mathrm{P}_{\mathrm{III}}^{D_8^{(1)}}$. Since the 1990s, discrete Painlevé equations have been studied actively from various points of view. Painlevé and discrete Painlevé equations (Painlevé systems) are now regarded as one of the most important classes of equations in the theory of integrable systems (see, for example, [3]). In 2001, Sakai stated that Painlevé systems are classified by theory of rational surfaces and the system of discrete Painlevé equations is constructed in a unified manner as the birational action of a translation of the corresponding affine Weyl group on a certain family of rational surfaces[15].

There are many kind of discrete Painlevé equations and some of them are regarded as the discrete analog of Painlevé equations. We note here that a discrete analog of $\mathrm{P_X}$ is a discrete Painlevé equation which leads to $\mathrm{P_X}$ by a continuous limit without loss of parameters. Most of discrete analogs of Painlevé equations have been already found, but discrete analogs of $\mathrm{P}_{\mathrm{III}}^{D_7^{(1)}}$ and $\mathrm{P}_{\mathrm{III}}^{D_8^{(1)}}$ were not known.

We show that the q-difference equation,

$$f(p^2t)f(t) = \frac{(f(pt)+p^{-1}t^{-1})(f(pt)+p^{-1}t^{-1}\alpha)}{1+f(pt)}, \tag{1.1}$$

where $\alpha, t, p \in \mathbb{C}^\times$, is the first model of a discrete analog of $\mathrm{P}_{\mathrm{III}}^{D_7^{(1)}}$. In fact, by setting

$$(1+\alpha)t^{-1} = (1-p)^4 As, \quad \alpha t^{-2} = -(1-p)^6 s^2, \quad f(t) = (1-p)^2 X(s), \tag{1.2}$$

and letting $p \to 1$, we obtain $\mathrm{P}_{\mathrm{III}}^{D_7^{(1)}}$,

$$X'' = \frac{(X')^2}{X} - \frac{X'}{s} - \frac{X^2}{s^2} + \frac{A}{s} - \frac{1}{X}, \tag{1.3}$$

where $X' = \frac{\mathrm{d}X}{\mathrm{d}s}$. Therefore we call (1.1) a q-Painlevé III equation of type $D_7^{(1)}$ (q-$\mathrm{P}_{\mathrm{III}}^{D_7^{(1)}}$). We note here that (1.1) is obtained by substituting

$$\beta = \alpha^{-1}, \quad \gamma = 1, \tag{1.4}$$

and putting

$$q = p^2, \quad g(t) = f(q^{-1/2}t), \tag{1.5}$$

in a q-analog of $\mathrm{P_V}$ (q-$\mathrm{P_V}$)[15],

$$g(qt)g(t) = \frac{(f(t)+t^{-1})(f(t)+\alpha t^{-1})}{1+\gamma f(t)}, \quad f(q^{-1}t)f(t) = \frac{(g(t)+q^{1/2}\alpha\beta t^{-1})(g(t)+q^{1/2}\beta^{-1}t^{-1})}{1+\gamma^{-1}g(t)}, \tag{1.6}$$

where $\alpha, \beta, \gamma, t, q \in \mathbb{C}^\times$ are parameters. This specialization is called a projective reduction[4].

It is well known that $\mathrm{P}_{\mathrm{III}}^{D_7^{(1)}}$ has the following properties:

(i) existence of algebraic function solutions which are rational functions of $s^{1/3}$;

(ii) irreducibility in the sense of P. Painlevé and H. Umemura.

The aim of this paper is to show that q-$\mathrm{P}_{\mathrm{III}}^{D_7^{(1)}}$ has quite similar properties to the above.

This paper is organized as follows: in Section 2, we introduce a representation of the affine Weyl group of type $A_4^{(1)}$, and then derive q-$\mathrm{P}_{\mathrm{III}}^{D_7^{(1)}}$ from the affine Weyl group. In Section 3, we construct algebraic function solutions to q-$\mathrm{P}_{\mathrm{III}}^{D_7^{(1)}}$ and show that each of them is expressed as a ratio of Laurent polynomials in $t^{1/3}$. In Section 4, we prove irreducibility of q-$\mathrm{P}_{\mathrm{III}}^{D_7^{(1)}}$ in the sense of decomposable extensions, which implies that any transcendental solution cannot be algebraically expressed by solutions of linear difference equations and solutions of first order algebraic difference equations. Concluding remarks are given in Section 5.

Throughout this paper, we use the following conventions of q-analysis with $|q| < 1$ (cf. the books [2, 5]).

q-Shifted factorials:

$$(a;q)_k = \prod_{i=1}^{k}(1-aq^{i-1}), \quad (a_1,\cdots,a_s;q)_n = \prod_{j=1}^{s}(a_j;q)_n \tag{1.7}$$

$$(a;p,q)_k = \prod_{i,j=0}^{k-1}(1-p^iq^ja), \quad (a_1,\cdots,a_s;p,q)_n = \prod_{j=1}^{s}(a_j;p,q)_n. \tag{1.8}$$

Jacobi theta function:

$$\Theta(a;q) = (a;q)_\infty(qa^{-1};q)_\infty. \tag{1.9}$$

It holds that

$$(qa;q)_\infty = \frac{(a;q)_\infty}{1-a}, \tag{1.10}$$

$$(pa;p,q)_\infty = \frac{(a;p,q)_\infty}{(a;q)_\infty}, \tag{1.11}$$

$$\Theta(qa;q) = -\frac{\Theta(a;q)}{a}. \tag{1.12}$$

2 Affine Weyl group of type $A_4^{(1)}$

2.1 Projective reduction to q-$\mathrm{P}_{\mathrm{III}}^{D_7^{(1)}}$

We formulate the family of Bäcklund transformations of q-P_{V}, (1.6), as a birational representation of the affine Weyl group of type $A_4^{(1)}$. We refer to [12] for basic ideas of this formulation.

We define the transformations s_i $(i = 0, 1, 2, 3, 4)$, σ, and ι on variables f_j $(j = 0, 1, 2, 3, 4)$ and parameters a_k $(k = 0, 1, 2, 3, 4)$ by

$$\begin{aligned}
&s_i(a_j) = a_j {a_i}^{-a_{ij}}, \quad s_i(f_{i+2}) = \frac{a_{i+3}a_{i+4}(a_i a_{i+1} + a_{i+3} f_i)}{{a_{i+1}}^2 f_{i+3}}, \quad s_i(f_{i+4}) = \frac{a_{i+4}(a_{i+2} + a_{i+4} a_i f_{i+1})}{a_i a_{i+1} {a_{i+2}}^2 f_{i+3}},\\
&s_i(f_j) = f_j \quad (j \neq i+2, i+4), \quad \sigma(a_i) = a_{i+1}, \quad \sigma(f_i) = f_{i+1}, \quad i \in \mathbb{Z}/5\mathbb{Z},\\
&\iota : (a_0, a_1, a_2, a_3, a_4, f_0, f_1, f_2, f_3, f_4) \mapsto ({a_0}^{-1}, {a_4}^{-1}, {a_3}^{-1}, {a_2}^{-1}, {a_1}^{-1}, f_1, f_0, f_4, f_3, f_2).
\end{aligned}$$

Here the symmetric 5×5 matrix

$$A = (a_{ij})_{i,j=0}^4 = \begin{pmatrix} 2 & -1 & 0 & 0 & -1 \\ -1 & 2 & -1 & 0 & 0 \\ 0 & -1 & 2 & -1 & 0 \\ 0 & 0 & -1 & 2 & -1 \\ -1 & 0 & 0 & -1 & 2 \end{pmatrix}, \tag{2.1}$$

is the Cartan matrix of type $A_4^{(1)}$. Note that f_i's have the conditions

$${a_{i+3}}^2 a_{i+4} f_i = a_{i+1}(a_i a_{i+1} f_{i+2} f_{i+3} - a_{i+3} a_{i+4}) \quad (i \in \mathbb{Z}/5\mathbb{Z}). \tag{2.2}$$

Proposition 2.1. *The group of birational transformations $\langle s_0, s_1, s_2, s_3, s_4, \sigma, \iota\rangle$ forms the affine Weyl group of type $A_4^{(1)}$, denoted by $\widetilde{W}(A_4^{(1)})$. Namely, the transformations satisfy the fundamental relations*

$$\begin{aligned}
&{s_i}^2 = 1, \quad (s_i s_{i\pm1})^3 = 1, \quad (s_i s_j)^2 = 1 \quad (j \neq i \pm 1), \quad \sigma^5 = 1, \quad \sigma s_i = s_{i+1}\sigma,\\
&\iota^2 = 1, \quad \iota s_0 = s_0 \iota, \quad \iota s_1 = s_4 \iota, \quad \iota s_2 = s_3 \iota, \quad i \in \mathbb{Z}/5\mathbb{Z}.
\end{aligned}$$

In general, for a function $F = F(a_i, f_j)$, we let an element $w \in \widetilde{W}(A_4^{(1)})$ act as $w.F(a_i, f_j) = F(w.a_i.w, f_j)$, that is, w is an injective homomorphism. Note that $q = a_0 a_1 a_2 a_3 a_4$ is invariant under any action of $\langle s_0, s_1, s_2, s_3, s_4, \sigma\rangle$. We define the translations T_i $(i = 0, 1, 2, 3, 4)$ by

$$T_0 = \sigma s_4 s_3 s_2 s_1, \quad T_1 = \sigma s_0 s_4 s_3 s_2, \quad T_2 = \sigma s_1 s_0 s_4 s_3, \quad T_3 = \sigma s_2 s_1 s_0 s_4, \quad T_4 = \sigma s_3 s_2 s_1 s_0. \tag{2.3}$$

Their actions on a_i's are given by

$$\begin{aligned}
T_0 &: (a_0, a_1, a_2, a_3, a_4) \mapsto (q a_0, q^{-1} a_1, a_2, a_3, a_4),\\
T_1 &: (a_0, a_1, a_2, a_3, a_4) \mapsto (a_0, q a_1, q^{-1} a_2, a_3, a_4),\\
T_2 &: (a_0, a_1, a_2, a_3, a_4) \mapsto (a_0, a_1, q a_2, q^{-1} a_3, a_4),\\
T_3 &: (a_0, a_1, a_2, a_3, a_4) \mapsto (a_0, a_1, a_2, q a_3, q^{-1} a_4),\\
T_4 &: (a_0, a_1, a_2, a_3, a_4) \mapsto (q^{-1} a_0, a_1, a_2, a_3, q a_4).
\end{aligned}$$

Note that T_i's commute with each other and $T_0 T_1 T_2 T_3 T_4 = 1$. We introduce α, β, γ, t, f, and g by

$$\alpha = {a_4}^{-1}, \quad \beta = {a_2}^{1/2} {a_4}^{1/2}, \quad \gamma = q^{-1/4} {a_2}^{1/4} {a_3}^{1/2} {a_4}^{1/4}, \quad t = q^{-1/4} a_0 {a_2}^{1/4} {a_3}^{1/2} {a_4}^{1/4}, \tag{2.4}$$

$$f = q^{-3/4} {a_2}^{3/4} {a_3}^{3/2} {a_4}^{3/4} f_0, \quad g = q^{3/4} {a_2}^{-3/4} {a_3}^{-3/2} {a_4}^{-3/4} f_2. \tag{2.5}$$

Then the action of T_0 on f and g are expressed as

$$T_0(g)g = \frac{(f+t^{-1})(f+\alpha t^{-1})}{1+\gamma f}, \quad {T_0}^{-1}(f)f = \frac{(g+q^{1/2}\alpha\beta t^{-1})(g+q^{1/2}\beta^{-1}t^{-1})}{1+\gamma^{-1}g}, \tag{2.6}$$

which is equivalent to q-$\mathrm{P_V}$, (1.6). We regard T_0 and T_i $(i=1,2,3,4)$ as the time evolution and Bäcklund transformations of q-$\mathrm{P_V}$, respectively.

In order to derive q-$\mathrm{P}_{\mathrm{III}}^{D_7^{(1)}}$, we introduce the transformations R_0 and R_{13} defined by

$$R_0 = \sigma^3 s_2 s_1, \quad R_{13} = \sigma s_0 s_4 s_2. \tag{2.7}$$

Note that R_0 and R_{13} commute with each other. The transformations are not translations but their squares are translations,

$${R_0}^2 = T_0, \quad {R_{13}}^2 = T_1 T_3. \tag{2.8}$$

Considering the projection of the action of R_0 and R_{13} on the subspace of the parameter space $\beta = \alpha^{-1}$ and $\gamma = 1$ (or, $a_0 a_1 = a_3$ and $a_2 = a_4$), we have

$$\begin{aligned} R_0 &: \ (\alpha, t) \mapsto (\alpha, q^{1/2}t), \\ R_{13} &: \ (\alpha, t) \mapsto (q^{1/2}\alpha, t). \end{aligned}$$

Then the action of R_0 can be expressed as

$$R_0(f) = \frac{(f+t^{-1})(f+\alpha t^{-1})}{g(1+f)}, \qquad {R_0}^{-1}(f) = g, \tag{2.9}$$

which is equivalent to q-$\mathrm{P}_{\mathrm{III}}^{D_7^{(1)}}$, (1.1). We regard R_0 as the time evolution of q-$\mathrm{P}_{\mathrm{III}}^{D_7^{(1)}}$. The action of R_{13} can be expressed as

$$R_{13}(f) = \frac{q^{1/2}\alpha + q^{1/2}\alpha t f + t g}{t^2 f g}, \qquad {R_{13}}^{-1}(f) = \frac{q^{1/2}\alpha + q^{1/2} t f + \alpha t g + \alpha t f g}{q^{1/2} t f (t f + \alpha)}, \tag{2.10}$$

which is a Bäcklund transformation of (2.9) because of commutative property between R_0 and R_{13}. Therefore we obtain the following proposition:

Proposition 2.2. *Transformations T and T^{-1},*

$$T : (\alpha, t, f(t)) \mapsto \left(p\alpha, t, \frac{p\alpha + p\alpha t f(t) + t f(p^{-1}t)}{t^2 f(t) f(p^{-1}t)}\right), \tag{2.11}$$

$$T^{-1} : (\alpha, t, f(t)) \mapsto \left(p\alpha^{-1}, t, \frac{p\alpha + p t f(t) + \alpha t f(p^{-1}t) + \alpha t f(t) f(p^{-1}t)}{p t f(t)(t f(t) + \alpha)}\right), \tag{2.12}$$

are Bäcklund transformations of q-$\mathrm{P}_{\mathrm{III}}^{D_7^{(1)}}$, (1.1).

In general, we can derive various discrete Painlevé systems from elements of infinite order of affine Weyl groups that are not necessarily translations by taking a projection on a certain subspace of the parameter space. We call such a procedure a projective reduction[4].

2.2 τ function

We introduce the new variables τ_i $(i = 1, 2, \cdots, 7)$ with

$$f_2 = \frac{\tau_4\tau_5}{\tau_6\tau_7}, \quad f_4 = \frac{\tau_1\tau_2}{\tau_3\tau_7}, \tag{2.13}$$

and lift the representation of the affine Weyl group to τ_i's-level[16]:

Proposition 2.3. *The actions of s_i $(i = 0, 1, 2, 3, 4)$, ι, and σ are expressed on τ_k by the following*:

$$\begin{aligned}
&s_0(\tau_1) = \frac{a_4\left(a_0\tau_3\tau_4\tau_5 + a_2a_3\tau_1\tau_2\tau_6 + a_0a_3\tau_3\tau_6\tau_7\right)}{{a_0}^2a_1a_2\tau_4\tau_7}, \quad s_0(\tau_i) = \tau_i \ (i = 2, 3, 5, 6),\\
&s_0(\tau_4) = \frac{a_0a_4\left(a_0\tau_3\tau_4\tau_5 + a_2a_3\tau_1\tau_2\tau_6 + a_3\tau_3\tau_6\tau_7\right)}{a_1a_2\tau_1\tau_7},\\
&s_0(\tau_7) = \frac{a_4\left(a_0^2\tau_3\tau_4\tau_5 + a_3a_0\tau_3\tau_6\tau_7 + a_2a_3\tau_1\tau_2\tau_6\right)}{a_0a_1a_2\tau_1\tau_4},\\
&s_1(\tau_1) = \tau_2, \quad s_1(\tau_2) = \tau_1, \quad s_1(\tau_i) = \tau_i \ (i = 3, \cdots, 7),\\
&s_2(\tau_1) = \frac{a_0a_1\left(a_0\tau_4\tau_5 + a_2a_3\tau_6\tau_7\right)}{{a_3}^2\tau_3}, \quad s_2(\tau_3) = \frac{a_0a_1\left(a_0\tau_4\tau_5 + a_3\tau_6\tau_7\right)}{a_2{a_3}^2\tau_1},\\
&s_2(\tau_i) = \tau_i \ (i = 2, 4, 5, 6, 7),\\
&s_3(\tau_i) = \tau_i \ (i = 1, 2, 3, 5, 7),\\
&s_3(\tau_4) = \frac{a_2\left(a_2a_3\tau_1\tau_2 + a_0\tau_3\tau_7\right)}{{a_0}^2a_3a_4\tau_6}, \quad s_3(\tau_6) = \frac{a_2a_3\left(a_2\tau_1\tau_2 + a_0\tau_3\tau_7\right)}{{a_0}^2a_4\tau_4},\\
&s_4(\tau_4) = s_4(\tau_5), \quad s_4(\tau_5) = s_4(\tau_4), \quad s_4(\tau_i) = \tau_i \ (i = 1, 2, 3, 6, 7),\\
&\iota : (\tau_1, \tau_2, \tau_3, \tau_4, \tau_5, \tau_6, \tau_7) = (\tau_4, \tau_5, \tau_6, \tau_1, \tau_2, \tau_3, \tau_7),\\
&\sigma(\tau_1) = \frac{a_0a_1\left(a_0\tau_4\tau_5 + a_3\tau_6\tau_7\right)}{a_2{a_3}^2\tau_1}, \quad \sigma(\tau_2) = \tau_3, \quad \sigma(\tau_3) = \tau_6,\\
&\sigma(\tau_4) = \frac{a_4\left({a_0}^2\tau_3\tau_4\tau_5 + a_3a_0\tau_3\tau_6\tau_7 + a_2a_3\tau_1\tau_2\tau_6\right)}{a_0a_1a_2\tau_1\tau_4}, \quad \sigma(\tau_5) = \tau_7,\\
&\sigma(\tau_6) = \tau_5, \quad \sigma(\tau_7) = \tau_2.
\end{aligned}$$

Since we are studying the property of q-$\mathrm{P}_{\mathrm{III}}^{D_7^{(1)}}$, we consider the τ functions under the conditions $\beta = \alpha^{-1}$ and $\gamma = 1$ (or, $a_0a_1 = a_3$ and $a_2 = a_4$). We define the τ functions τ_N^n $(n, N \in \mathbb{Z})$ by

$$\tau_N^n = {R_0}^n{R_{13}}^N(\tau_4). \tag{2.14}$$

We note that τ_i's are expressed by τ_N^n as follows (Figure 1):

$$\tau_1 = \tau_2^0, \quad \tau_2 = \tau_1^2, \quad \tau_3 = \tau_2^2, \quad \tau_4 = \tau_0^0, \quad \tau_5 = \tau_2^1, \quad \tau_6 = \tau_1^1, \quad \tau_7 = \tau_1^0, \tag{2.15}$$

and (2.4) and (2.5) are rewritten as

$$f = f_0 = \frac{\tau_0^1\tau_2^2}{\tau_1^1\tau_1^2}, \quad t = a_0, \quad \alpha = {a_2}^{-1}. \tag{2.16}$$

3 Algebraic function solutions to q-$\mathrm{P}_{\mathrm{III}}^{D_7^{(1)}}$

In this section, we use the notation $\overline{F} = F(pt)$ for arbitrary function $F = F(t)$.

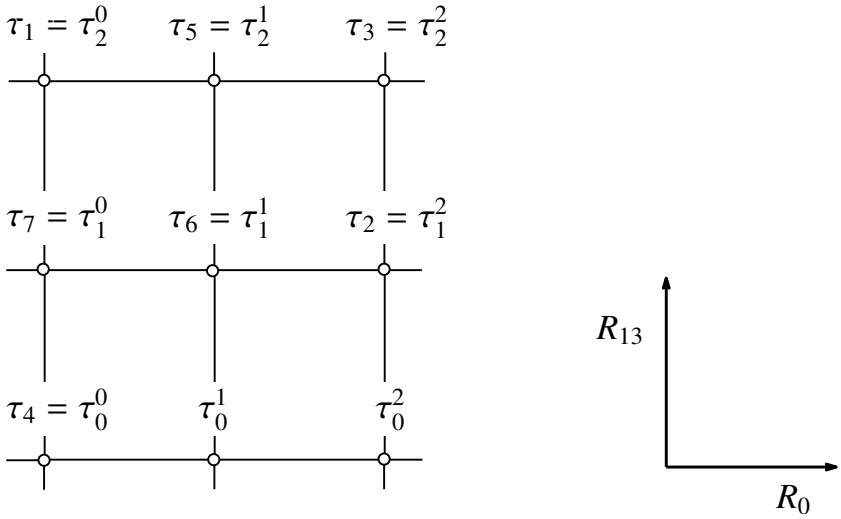

Figure 1. Configuration of the τ functions on the lattice.

3.1 Puiseux series representation of algebraic function solutions

Proposition 3.1. *Let f be an algebraic function solution to* (1.1)*. Then*

$$f = \sum_{i=-2}^{\infty} c_i t^{i/3} \in \mathbb{C}(t^{1/3}), \tag{3.1}$$

where $c_i \in \mathbb{C}$ and $c_{-2} \neq 0$.

Proof. Let $L = \mathbb{C}(t, f, \overline{f})$. By Lemma 12 in [11], $L = \mathbb{C}(x)$ where $x^n = t$ ($n \in \mathbb{Z}_{>0}$) and $\overline{x} = p^{1/n}x$. Express f as

$$f = \frac{P}{Q}, \tag{3.2}$$

where $P, Q \in \mathbb{C}[x] \setminus \{0\}$ and P and Q are relatively prime. From (1.1), we obtain

$$x^{2n}\overline{P}\underline{P}(P+Q)Q = \overline{Q}\underline{Q}(x^nP+Q)(x^nP+\alpha Q). \tag{3.3}$$

Let $v_0(F)$ denote the maximum number k such that $x^k \mid F$ for $F \in \mathbb{C}[x] \setminus \{0\}$. Assume $x \nmid Q$. Then, from (3.3), it follows that

$$2n + 2v_0(P) + v_0(P+Q) = 0, \tag{3.4}$$

which implies $n = 0$. Therefore we obtain $x \mid Q$ and so $x \nmid P$. Put $m = v_0(Q) \in \mathbb{Z}_{>0}$. From (3.3), it follows that

$$2n + m \geq 2m + 2\min(n, m), \tag{3.5}$$

which implies $2n = 3m$.

We can express f as

$$f = \sum_{i=-m}^{\infty} c_i x^i, \tag{3.6}$$

where $c_i \in \mathbb{C}$, $c_{-m} \neq 0$ To show $m/2 \nmid i \Rightarrow c_i = 0$, we assume that there exists i such that $m/2 \nmid i$ and $c_i \neq 0$. Let $k \cdot \frac{m}{2} + l = \min\{i \mid m/2 \nmid i \text{ and } c_i \neq 0\}$, $1 \leq l < m/2$. Then f can be expressed as

$$f = c_{-m}x^{-m} + c_{-m/2}x^{-m/2} + \cdots + c_{km/2}x^{km/2} + c_{km/2+l}x^{km/2+l} + \cdots .$$

From (1.1), we obtain

$$\overline{f}\underline{f}(1+f) = (f + x^{-3m/2})(f + \alpha x^{-3m/2}). \tag{3.7}$$

The coefficient of $x^{km/2+l-2m} = x^{(k-4)m/2+l}$ of the left side is

$$\begin{aligned} & c_{km/2+l}p^{km/2n+l/n}c_{-m}p^{m/n}c_{-m} + c_{-m}p^{-m/n}c_{km/2+l}p^{-km/2n-l/n}c_{-m} \\ & + c_{-m}p^{-m/n}c_{-m}p^{m/n}c_{km/2+l} \\ =& (p^{(k+2)m/2n+l/n} + p^{-(k+2)m/2n-l/n} + 1)c_{-m}^2 c_{km/2+l} \\ \neq& 0, \end{aligned} \tag{3.8}$$

and one of the right side is 0, a contradiction.

Therefore we find $f \in \mathbb{C}((x^{m/2})) \cap \mathbb{C}(x) = \mathbb{C}(x^{m/2})$. Then we have $L \subset \mathbb{C}(x^{m/2}) \subset \mathbb{C}(x) = L$, which yields $L = \mathbb{C}(x^{m/2}) = \mathbb{C}(x)$, and so $m = 2$ and $n = 3$ are obtained. Since $x^3 = t$, we can express f as

$$f = \sum_{i=-2}^{\infty} c_i t^{i/3} \in \mathbb{C}(t^{1/3}), \quad c_i \in \mathbb{C},\ c_{-2} \neq 0. \tag{3.9}$$

This expression is what we want. ■

In fact, when $\alpha = -1$, $q\text{-P}_{\text{III}}^{D_7^{(1)}}$ has the algebraic function solution,

$$f = -t^{-2/3}. \tag{3.10}$$

Moreover, using the Bäcklund transformation (2.11), we obtain the algebraic function solutions:

$$f = -t^{-2/3}(p^{1/3} + (1-p^{1/3})t^{1/3}) \quad (\alpha = -p), \tag{3.11}$$

$$f = -t^{-2/3}\frac{p^{4/3} + p^{1/3}(1-p^{4/3})t^{1/3} + p^{-1/3}(1-p^{1/3})(1-p^{5/3})t^{2/3}}{(p^{1/3} + (1-p^{1/3})t^{1/3})(p^{1/3} + p^{-1/3}(1-p^{1/3})t^{1/3})} \quad (\alpha = -p^2). \tag{3.12}$$

By using the continuous limit (1.2) and $p \to 1$, we obtain the algebraic function solution to $\text{P}_{\text{III}}^{D_7^{(1)}}$ as follows:

$$X = -s^{2/3} \quad (A = 0), \tag{3.13}$$

$$X = \frac{2}{9}s^{1/3}\left(-\frac{3+9s^{1/3}}{2}\right) \quad (A = 1), \tag{3.14}$$

$$X = \frac{2}{3}s^{1/3}\frac{\begin{vmatrix} \dfrac{35+90s^{1/3}+81s^{2/3}}{8} & -\dfrac{105+315s^{1/3}+405s^{2/3}+243s}{16} \\ 1 & -\dfrac{3+9s^{1/3}}{2} \end{vmatrix}}{\left(-\dfrac{3+9s^{1/3}}{2}\right)^2} \quad (A = 2). \tag{3.15}$$

These solutions to $\mathrm{P}_{\mathrm{III}}^{D_7^{(1)}}$ will be seen in [13] and K. Kajiwara, T. Masuda, and Y. Ohta anticipate determinant formula of them as follows:

$$X = \frac{2(2N-1)}{9} s^{1/3} \frac{\psi_N \psi_{N-2}}{{\psi_{N-1}}^2}, \quad (A = N \in \mathbb{Z}_{\geq 0}), \tag{3.16}$$

where

$$\psi_{-2} = \frac{9}{2} s^{1/3}, \quad \psi_{-1} = \psi_0 = 1, \tag{3.17}$$

$$\psi_N = \begin{vmatrix} P_N^{(N-1)}(s) & P_{N+1}^{(N-1)}(s) & \cdots & P_{2N-1}^{(N-1)}(s) \\ P_{N-2}^{(N-2)}(s) & P_{N-1}^{(N-2)}(s) & \cdots & P_{2N-3}^{(N-2)}(s) \\ \vdots & \vdots & \ddots & \vdots \\ P_{-N+2}^{(0)}(s) & P_{-N+3}^{(0)}(s) & \cdots & P_1^{(0)}(s) \end{vmatrix} \quad (N > 0), \tag{3.18}$$

$$P_n^{(k)}(s) = 0 \quad (n < 0), \quad P_n^{(k)}(s) = L_n^{(-k-n-3/2)}\left(\frac{9}{2} s^{1/3}\right) \quad (n \geq 0). \tag{3.19}$$

Here $L_n^{(\alpha)}(x)$ is Laguerre Polynomial,

$$L_n^{(\alpha)}(x) = \sum_{r=0}^{n} \frac{(-1)^r \Pi_{k=1}^{n-r}(n+\alpha-k+1)}{(n-r)!r!} x^r. \tag{3.20}$$

3.2 Algebraic τ function

In [7, 8, 9], τ functions expressed by gauge functions and basic hypergeometric function are called hypergeometric τ functions. In this section, we construct τ functions expressed by gauge functions and algebraic functions. We call them algebraic τ functions.

We assume that τ_N^n are functions of t such that

$$\tau_N^n = \tau_N^0(p^n t), \tag{3.21}$$

and

$$\alpha = -p^2. \tag{3.22}$$

By the action of the affine Weyl group, τ_N^n is determined as a rational function in τ_0^n, τ_1^n, and τ_2^n (or $\tau_1, \tau_2, \ldots, \tau_7$). Thus, we only have to determine τ_0^n, τ_1^n, and τ_2^n. From (2.7), (2.16), and Proposition 2.3, we see that the action of R_0 on τ_i is given by

$$R_0(\tau_1) = \tau_5, \quad R_0(\tau_5) = \tau_3, \quad R_0(\tau_6) = \tau_2, \quad R_0(\tau_7) = \tau_6, \tag{3.23}$$

$$R_0(\tau_2) = \frac{t^2\tau_3(t\tau_4\tau_5 + p\alpha\tau_6\tau_7) + pt^2\tau_1\tau_2\tau_6}{p\alpha\tau_1\tau_7}, \tag{3.24}$$

$$R_0(\tau_3) = \frac{t\tau_3(t\tau_4\tau_5 + p\alpha\tau_6\tau_7) + p\tau_1\tau_2\tau_6}{p\alpha\tau_1\tau_4}, \tag{3.25}$$

$$R_0(\tau_4) = \frac{t\tau_4\tau_5 + p\alpha\tau_6\tau_7}{p\tau_1}, \tag{3.26}$$

$${R_0}^{-1}(\tau_1) = \frac{p\alpha t^2\tau_3\tau_7(\tau_4\tau_5 + \tau_6\tau_7) + t\tau_1\tau_2(t\tau_4\tau_5 + p\tau_6\tau_7)}{p^3\alpha\tau_2\tau_3\tau_4}, \tag{3.27}$$

$${R_0}^{-1}(\tau_4) = \frac{t\tau_4\tau_5 + p\tau_6\tau_7}{p\alpha\tau_3}, \tag{3.28}$$

$${R_0}^{-1}(\tau_7) = \frac{t^2(\tau_4\tau_5 + \tau_6\tau_7)}{p^2\alpha\tau_2}. \tag{3.29}$$

Lemma 3.1. *Equations* (3.24), (3.25), *and* (3.27) *can be eliminated.*

Proof. Erasing the term "$t\tau_4\tau_5 + p\alpha\tau_6\tau_7$" from (3.24) by using (3.26), we obtain

$$\tau_7 = \frac{t^2(R_0(\tau_4)\tau_3 + \tau_2\tau_6)}{\alpha R_0(\tau_2)}, \tag{3.30}$$

which is equivalent to (3.29). Erasing the term "$t\tau_4\tau_5 + p\alpha\tau_6\tau_7$" from (3.25) by using (3.26), we obtain

$$\tau_4 = \frac{t\tau_3 R_0(\tau_4) + \tau_2\tau_6}{\alpha R_0(\tau_3)}, \tag{3.31}$$

which is equivalent to (3.28). Finally, erasing the terms "$\tau_4\tau_5 + \tau_6\tau_7$" and "$t\tau_4\tau_5 + p\tau_6\tau_7$" from (3.27) by using (3.28) and (3.29), we obtain

$$\tau_4 = \frac{t{R_0}^{-1}(\tau_4)\tau_1 + p^2\alpha\tau_7{R_0}^{-1}(\tau_7)}{p^2{R_0}^{-1}(\tau_1)}, \tag{3.32}$$

which is equivalent to (3.26). ■

By (2.15) and (3.22), we rewrite (3.26), (3.28), and (3.29) as follows:

$$\tau_2^1\tau_0^2 = t\tau_0^1\tau_2^2 - p^2\tau_1^1\tau_1^2, \tag{3.33}$$
$$\tau_2^3\tau_0^0 = -p^{-2}t\tau_0^1\tau_2^2 - p^{-2}\tau_1^1\tau_1^2, \tag{3.34}$$
$$\tau_1^3\tau_1^0 = -p^{-2}t^2\tau_0^1\tau_2^2 - p^{-2}t^2\tau_1^1\tau_1^2, \tag{3.35}$$

respectively. Thus, the action of R_0 on τ_i is equivalent to the bilinear equations (3.33)–(3.35). By elementary calculations, we can verify that

$$\begin{aligned}\tau_0^n =& -p^{(13+24n)/12}t^2 \\ &\times \frac{(p^{n/3}t^{1/3}, -p^{(-1+n)/3}t^{1/3}; p^{1/3}, p^{2/3})_\infty (p^{(-5+4n)/12}t^{1/3}; p^{1/3}, p^{1/6})_\infty}{(p^{(11-4n)/12}t^{-1/3}; p^{1/3}, p^{1/6})_\infty} \\ &\times \left(\frac{\Theta(p^{(1+4n)/12}t^{1/3}; p^{1/3})}{\Theta(p^{(-5+4n)/12}t^{1/3}; p^{1/3})}\right)^{1/4},\end{aligned} \tag{3.36}$$

$$\begin{aligned}\tau_1^n =& p^n t(p^{1/3} + p^{(n-2)/3}(1-p^{1/3})t^{1/3}) \\ &\times \frac{(p^{n/3}t^{1/3}, -p^{(-2+n)/3}t^{1/3}; p^{1/3}, p^{2/3})_\infty (p^{(-7+4n)/12}t^{1/3}; p^{1/3}, p^{1/6})_\infty}{(p^{(13-4n)/12}t^{-1/3}; p^{1/3}, p^{1/6})_\infty} \\ &\times \left(\frac{\Theta(p^{(-5+4n)/12}t^{1/3}; p^{1/3})}{\Theta(p^{(1+4n)/12}t^{1/3}; p^{1/3})}\right)^{1/4},\end{aligned} \tag{3.37}$$

$$\begin{aligned}\tau_2^n =& \left(p^{4/3} + p^{(n-1)/3}(1-p^{4/3})t^{1/3} + p^{(2n-5)/3}(1-p^{1/3})(1-p^{5/3})t^{2/3}\right) \\ &\times \frac{(p^{n/3}t^{1/3}, -p^{(-3+n)/3}t^{1/3}; p^{1/3}, p^{2/3})_\infty (p^{(-9+4n)/12}t^{1/3}; p^{1/3}, p^{1/6})_\infty}{(p^{(15-4n)/12}t^{-1/3}; p^{1/3}, p^{1/6})_\infty} \\ &\times \left(\frac{\Theta(p^{(1+4n)/12}t^{1/3}; p^{1/3})}{\Theta(p^{(-5+4n)/12}t^{1/3}; p^{1/3})}\right)^{1/4},\end{aligned} \tag{3.38}$$

is a solution to (3.33)–(3.35). Incidentally, the algebraic function solution (3.12),

$$f = \frac{\tau_0^1\tau_2^2}{\tau_1^1\tau_1^2} = -t^{-2/3}\frac{p^{4/3} + p^{1/3}(1-p^{4/3})t^{1/3} + p^{-1/3}(1-p^{1/3})(1-p^{5/3})t^{2/3}}{(p^{1/3} + (1-p^{1/3})t^{1/3})(p^{1/3} + p^{-1/3}(1-p^{1/3})t^{1/3})}, \tag{3.39}$$

is useful to find out this solution.

We next express τ_N^n for a general $N \in \mathbb{Z}$ by gauge functions and algebraic functions. From (3.26), (3.28), and (3.29), we obtain the following bilinear equations:

$$p^{N+2}\tau_{N+1}^{n+1}\tau_{N+1}^{n} = -\tau_{N+2}^{n}\tau_{N}^{n+1} + p^{n-1}t\tau_{N+2}^{n+1}\tau_{N}^{n}, \tag{3.40}$$
$$\tau_{N+1}^{n+1}\tau_{N+1}^{n} = -p^{N+2}\tau_{N+2}^{n+2}\tau_{N}^{n-1} - p^{n-1}t\tau_{N+2}^{n+1}\tau_{N}^{n}, \tag{3.41}$$
$$\tau_{N+2}^{n}\tau_{N}^{n-1} = -\tau_{N+1}^{n-1}\tau_{N+1}^{n} - p^{6-2n+N}t^{-2}\tau_{N+1}^{n-2}\tau_{N+1}^{n+1}. \tag{3.42}$$

We define ψ_N^n by

$$\begin{aligned}\tau_N^n =& \frac{(p^{n/3}t^{1/3}, -p^{(-1+n-N)/3}t^{1/3}; p^{1/3}, p^{2/3})_\infty (p^{(-5+4n-2N)/12}t^{1/3}; p^{1/3}, p^{1/6})_\infty}{(p^{(11-4n+2N)/12}t^{-1/3}; p^{1/3}, p^{1/6})_\infty} \\ &\times \left(\frac{\Theta(p^{(1+4n)/12}t^{1/3}; p^{1/3})}{\Theta(p^{(-5+4n)/12}t^{1/3}; p^{1/3})}\right)^{(-1)^N/4} \psi_N^n.\end{aligned} \tag{3.43}$$

Then it holds that

$$\psi_0^n = -p^{(13+24n)/12}t^2, \tag{3.44}$$
$$\psi_1^n = p^n t(p^{1/3} + p^{(n-2)/3}(1-p^{1/3})t^{1/3}), \tag{3.45}$$
$$\psi_2^n = p^{4/3} + p^{(n-1)/3}(1-p^{4/3})t^{1/3} + p^{(2n-5)/3}(1-p^{1/3})(1-p^{5/3})t^{2/3}, \tag{3.46}$$

and (3.40)–(3.42) are rewritten as

$$\begin{aligned}&(-1)^{N+1}p^{(8+4N-(1-2n)(-1)^N)/4}t^{((-1)^N-1)/2}\psi_{N+1}^{n+1}\psi_{N+1}^{n} \\ &= p^{(-4-N+2n)/4}(1+p^{(-3+n-N)/3}t^{1/3})\psi_{N+2}^{n}\psi_{N}^{n+1} - p^{(-8+N+10n)/12}t^{1/3}\psi_{N+2}^{n+1}\psi_{N}^{n},\end{aligned} \tag{3.47}$$
$$\begin{aligned}&(-1)^{N+1}p^{-(1-2n)(-1)^N/4}t^{((-1)^N-1)/2}\psi_{N+1}^{n+1}\psi_{N+1}^{n} \\ &= p^{(4+3N+2n)/4}(1-p^{(n-1)/3}t^{1/3})\psi_{N+2}^{n+2}\psi_{N}^{n-1} + p^{(-8+N+10n)/12}t^{1/3}\psi_{N+2}^{n+1}\psi_{N}^{n},\end{aligned} \tag{3.48}$$
$$\begin{aligned}&(-1)^{N+1}p^{(6+9(-1)^N-2(1+3(-1)^N)n+N)/12}t^{-(1+3(-1)^N)/6}\psi_{N+2}^{n}\psi_{N}^{n-1} \\ &= \psi_{N+1}^{n-1}\psi_{N+1}^{n} + t^{-2/3}(p^{(2-n)/3} - t^{1/3})(p^{(4-n+N)/3} + t^{1/3})\psi_{N+1}^{n-2}\psi_{N+1}^{n+1},\end{aligned} \tag{3.49}$$

respectively. For convenience, we introduce

$$u = t^{1/3}. \tag{3.50}$$

It is obvious that ψ_N^n is a rational function for u from (3.49) and initial conditions (3.44)–(3.46). Set

$$\psi_N^0 = \psi_N(t) = u^{e_N}\frac{P_N(u)}{Q_N(u)}, \tag{3.51}$$

where P_N is a polynomial, Q_N is a monic polynomial, $e_N \in \mathbb{Z}$, P_N and Q_N are relatively prime, and $P_N(0), Q_N(0) \neq 0$. We shall show that ψ_N^n is a Laurent polynomial by the following lemma:

Lemma 3.2. *It holds that*

(i) $Q_N = 1$*;*

(ii) $P_N, \overline{P}_N$ *:relatively prime;*

(iii) $P_N, \overline{\overline{P}}_N$ *:relatively prime.*

Proof. We shall prove this lemma by induction for $N \in \mathbb{Z}_{\geq 0}$. It is obvious for or $N = 0, 1$. We assume that (i)–(iii) are hold for $N = 0, 1, \ldots, M-1$ ($M \geq 2$). From (3.49),

$$\psi_M \underline{\psi}_{M-2} = p^{-e_{M-2}/3} u^{e_M + e_{M-2}} \frac{P_M \underline{P}_{M-2}}{Q_M}, \tag{3.52}$$

is a Laurent polynomial, which implies

$$Q_M \mid \underline{P}_{M-2}. \tag{3.53}$$

From (3.47) and the fact that $\overline{\psi}_M \psi_{M-2}$ is a Laurent polynomial,

$$(1 + p^{(-1-M)/3} u) \psi_M \overline{\psi}_{M-2} = p^{e_{M-2}/3} (1 + p^{(-1-M)/3} u) u^{e_M + e_{M-2}} \frac{P_M \overline{P}_{M-2}}{Q_M}, \tag{3.54}$$

is a Laurent polynomial, which implies

$$Q_M \mid (1 + p^{(-1-M)/3} u) \overline{P}_{M-2}. \tag{3.55}$$

From (3.48) and the fact that $\overline{\psi}_M \psi_{M-2}$ is a Laurent polynomial,

$$(1 - p^{-1/3} u) \overline{\overline{\psi}}_M \underline{\psi}_{M-2} = p^{(2e_M - e_{M-2})/3} u^{e_M + e_{M-2}} (1 - p^{-1/3} u) \frac{\overline{\overline{P}}_M \underline{P}_{M-2}}{\overline{\overline{Q}}_M}, \tag{3.56}$$

is a Laurent polynomial, which implies

$$Q_M \mid (1 - p^{-1} u) \underline{\underline{P}}_{M-2}. \tag{3.57}$$

From (ii), (iii), (3.53), (3.55), and (3.57), it holds that

$$Q_M \mid (1 + p^{(-1-M)/3} u), \tag{3.58}$$

$$Q_M \mid (1 - p^{-1} u). \tag{3.59}$$

Therefore $Q_M = 1$, and so (i) holds for $N = M$.

We next prove (ii). Set $S_1 = gcd(P_M, \overline{P}_M)$ where S_1 is a monic polynomial. From (3.47)–(3.49), we have

$$\begin{aligned}
&(-1)^{M+1} p^{(4M-(-1)^M)/4 + e_{M-1}/3} u^{3((-1)^M - 1)/2 + 2e_{M-1}} \overline{P}_{M-1} P_{M-1} \\
&\quad = p^{(-2-M)/4 + e_{M-2}/3} u^{e_M + e_{M-2}} (1 + p^{(-1-M)/3} u) P_M \overline{P}_{M-2} \\
&\quad - p^{(-10+M)/12 + e_M/3} u^{1 + e_M + e_{M-2}} \overline{P}_M P_{M-2},
\end{aligned} \tag{3.60}$$

$$\begin{aligned}
&(-1)^{M-1} p^{(-1)^{M+1}/4 + e_{M-1}/3} u^{3((-1)^M - 1)/2 + 2e_{M-1}} \overline{P}_{M-1} P_{M-1} \\
&\quad = p^{(-2+3M)/4 + (2e_M - e_{M-2})/3} u^{e_M + e_{M-2}} (1 - p^{-1/3} u) \overline{\overline{P}}_M \underline{P}_{M-2} \\
&\quad + p^{(-10+M)/12 + e_M/3} u^{1 + e_M + e_{M-2}} \overline{P}_M P_{M-2},
\end{aligned} \tag{3.61}$$

$$\begin{aligned}
&(p^{2/3} - u)(p^{(2+M)/3} + u) p^{-e_{M-1}/3} u^{-2 + 2e_{M-1}} \underline{\underline{P}}_{M-1} \overline{P}_{M-1} \\
&\quad = (-1)^{M+1} p^{(4 + 9(-1)^M + M)/12 - e_{M-2}/3} u^{-(1 + 3(-1)^M)/2 + e_M + e_{M-2}} P_M \underline{P}_{M-2} \\
&\quad - p^{-e_{M-1}/3} u^{2e_{M-1}} \underline{P}_{M-1} P_{M-1}.
\end{aligned} \tag{3.62}$$

From (3.60) and (3.61), we obtain

$$S_1 \mid \overline{P}_{M-1} P_{M-1}, \tag{3.63}$$

$$S_1 \mid P_{M-1} \underline{P}_{M-1}, \tag{3.64}$$

respectively. From (3.62) and (3.64), we obtain

$$S_1 \mid (p^{2/3}-u)(p^{(2+M)/3}+u)\underline{\underline{P}}_{M-1}\overline{P}_{M-1}. \tag{3.65}$$

From (3.62) and (3.63), we obtain

$$S_1 \mid (p^{2/3}-p^{1/3}u)(p^{(2+M)/3}+p^{1/3}u)\underline{P}_{M-1}\overline{\overline{P}}_{M-1}. \tag{3.66}$$

Since $\overline{P}_{M-1}P_{M-1}$ and $\underline{P}_{M-1}\overline{\overline{P}}_{M-1}$ are relatively prime, it follows by (3.63) and (3.66) that

$$S_1 \mid (p^{2/3}-p^{1/3}u)(p^{(2+M)/3}+p^{1/3}u). \tag{3.67}$$

Since $P_{M-1}\underline{P}_{M-1}$ and $\underline{\underline{P}}_{M-1}\overline{P}_{M-1}$ are relatively prime, it follows by (3.64) and (3.65) that

$$S_1 \mid (p^{2/3}-u)(p^{(2+M)/3}+u). \tag{3.68}$$

Therefore $S_1 = 1$, and so (ii) holds for $N = M$.

We finally prove (iii). Set $S_2 = gcd(P_M, \overline{\overline{P}}_M)$ where S_2 is a monic polynomial. From (3.47) and (3.48), we obtain

$$\begin{aligned}&(p^M+1)(-1)^{M+1}p^{-(-1)^M/4+e_{M-1}/3}u^{3(-1)^M/2+2e_{M-1}}\overline{P}_{M-1}P_{M-1}\\ &\quad = p^{(-2-M)/4+e_{M-2}/3}u^{3/2+e_M+e_{M-2}}(1+p^{(-1-M)/3}u)P_M\overline{P}_{M-2}\\ &\quad + p^{(-2+3M)/4+(2e_M-e_{M-2})/3}u^{3/2+e_M+e_{M-2}}(1-p^{-1/3}u)\overline{\overline{P}}_M\underline{P}_{M-2},\end{aligned} \tag{3.69}$$

which implies

$$S_2 \mid \overline{P}_{M-1}P_{M-1}. \tag{3.70}$$

From (3.60), (3.70), and (ii), we obtain

$$S_2 \mid P_{M-2}. \tag{3.71}$$

From $\overline{S}_2 \mid \overline{P}_{M-2}$ and (3.60), we obtain

$$S_2 \mid P_{M-1}\underline{P}_{M-1}. \tag{3.72}$$

From $\underline{S}_2 \mid \underline{P}_{M-2}$ and (3.61), we obtain

$$S_2 \mid \overline{\overline{P}}_{M-1}\overline{P}_{M-1}. \tag{3.73}$$

From (3.70), (3.72), and (3.73), $S_2 = 1$, and so (iii) holds for $N = M$. We can prove this lemma for $N \in \mathbb{Z}_{<0}$ in a similar way. ■

Therefore we obtain the following theorem:

Theorem 3.1. *The functions,*

$$f = (-1)^N p^{(2-3(-1)^N+N)/12}t^{-(1+3(-1)^N)/6}\frac{\psi_N(pt)\psi_{N+2}(p^2t)}{\psi_{N+1}(pt)\psi_{N+1}(p^2t)}, \tag{3.74}$$

are algebraic function solutions to (1.1) *with* $\alpha = -p^{2+N}$. *Here* $\psi_N(t)$ *is a Laurent polynomial for* $t^{1/3}$ *constructed by*

$$\begin{aligned}&(-1)^{N+1}p^{(6+9(-1)^N+N)/12}t^{-(1+3(-1)^N)/6}\psi_{N+2}(t)\psi_N(p^{-1}t)\\ &\quad = \psi_{N+1}(p^{-1}t)\psi_{N+1}(t) + (p^{2/3}-t^{1/3})(p^{(4+N)/3}+t^{1/3})t^{-2/3}\psi_{N+1}(p^{-2}t)\psi_{N+1}(pt),\end{aligned} \tag{3.75}$$

under the initial conditions

$$\psi_0(t) = -p^{13/12}t^2, \tag{3.76}$$

$$\psi_1(t) = t(p^{1/3}+p^{-2/3}(1-p^{1/3})t^{1/3}). \tag{3.77}$$

4 Irreducibility of q-$\mathrm{P}_{\mathrm{III}}^{D_7^{(1)}}$

In this section, we prove irreducibility of q-$\mathrm{P}_{\mathrm{III}}^{D_7^{(1)}}$. We use the following terms of difference algebra.

Throughout this section every field is of characteristic zero. When K is a field and τ is an isomorphism of K into itself, namely an injective endomorphism, the pair $\mathcal{K} = (K, \tau)$ is called a difference field. We call τ the (transforming) operator and K the underlying field. For $a \in K$, an element $\tau^n a \in K$, $n \in \mathbb{Z}$, is called the n-th transform of a and is frequently denoted by a_n if it exists. If $\tau K = K$, we say that $\mathcal{K}$ is inversive. If $K/\tau K$ is algebraic, we say that $\mathcal{K}$ is almost inversive. For difference fields $\mathcal{K} = (K, \tau)$ and $\mathcal{K}' = (K', \tau')$, $\mathcal{K}'/\mathcal{K}$ is called a difference field extension if K'/K is a field extension and $\tau'|_K = \tau$. In this case we say that $\mathcal{K}'$ is a difference overfield of $\mathcal{K}$ or $\mathcal{K}$ is a difference subfield of $\mathcal{K}'$. For brevity we sometimes use (K, τ') instead of $(K, \tau'|_K)$. Let $\mathcal{K}$ be a difference field, $\mathcal{L} = (L, \tau)$ a difference overfield of $\mathcal{K}$ and B a subset of L. The difference subfield $\mathcal{K}\langle B\rangle_{\mathcal{L}}$ of $\mathcal{L}$ is defined to be the difference field $(K(B, \tau B, \tau^2 B, \dots), \tau)$ and is denoted by $\mathcal{K}\langle B\rangle$ for brevity. A solution of a difference equation over $\mathcal{K}$ is defined to be an element of some difference overfield of $\mathcal{K}$ which satisfies the equation (cf. the books [1, 6]).

We say that q-$\mathrm{P}_{\mathrm{III}}^{D_7^{(1)}}$ is irreducible if there is no transcendental function solution in any decomposable extension of $(\mathbb{C}(t), t \mapsto pt)$ (cf. [10, 11]). The irreducibility implies that any transcendental function solution cannot be algebraically expressed by solutions of linear difference equations and solutions of first order algebraic difference equations. To obtain the irreducibility of q-$\mathrm{P}_{\mathrm{III}}^{D_7^{(1)}}$, we only have to prove the following theorem because of Lemma 4.10 in the paper[10] (cf. Lemma 9 in [11]):

Lemma 4.1 (Lemma 4.10 in [10])**.** *Let $\mathcal{K}$ be an almost inversive difference field, $\mathcal{D}$ a decomposable extension of $\mathcal{K}$ and $B \subset D$. Suppose that for any inversive difference overfield $\mathcal{L}$ of $\mathcal{K}$ and for any difference overfield $\mathcal{U}$ of $\mathcal{L}$ with $\mathcal{K}\langle B\rangle_{\mathcal{D}} \subset \mathcal{U}$, the following holds,*

$$\text{tr. deg } \mathcal{L}\langle B\rangle_{\mathcal{U}}/\mathcal{L} \leq 1 \Rightarrow \text{any } f \in B \text{ is algebraic over } L.$$

Then any $f \in B$ is algebraic over K.

Theorem 4.1. *Let $p \in \mathbb{C}^\times$ be not a root of unity, $\mathcal{L}$ an inversive difference overfield of $(\mathbb{C}(t), t \mapsto pt)$, $\mathcal{U} = (U, \tau)$ a difference overfield of $\mathcal{L}$ and $f \in U$ satisfy*

$$\overline{\overline{f}} f = \frac{(\overline{f} + p^{-1}t^{-1})(\overline{f} + p^{-1}t^{-1}\alpha^{-1})}{1 + \overline{f}}, \tag{4.1}$$

where $\overline{f} = \tau f$ and $\overline{\overline{f}} = \tau^2 f$. Then we obtain

$$\text{tr. deg } \mathcal{L}\langle f\rangle/\mathcal{L} \leq 1 \Rightarrow f \text{ is algebraic over } L. \tag{4.2}$$

The proof of Theorem 4.1 is given later. We now prove the following lemma:

Lemma 4.2. *Let $p \in \mathbb{C}^\times$ be not a root of unity, $\mathcal{L}$ an inversive difference overfield of $(\mathbb{C}(t), t \mapsto pt)$, $\mathcal{U} = (U, \tau)$ a difference overfield of $\mathcal{L}$ and $f \in \mathcal{U}$ satisfy (4.1). If tr. deg $\mathcal{L}\langle f\rangle/\mathcal{L} = 1$, then there are $n, l \in \mathbb{Z}_{\geq 0}$ such that*

$$\alpha^{n-2l} = p^n, \tag{4.3}$$

$0 \leq l \leq n$, $n \neq 0$ and $2l \neq n$.

Proof. There is an irreducible polynomial $F \in L[X,Y] \setminus \{0\}$ such that $F(f, \overline{f}) = 0$. We set

$$F = \sum_{i=0}^{n_0} \sum_{j=0}^{n_1} a_{i,j} X^i Y^j, \tag{4.4}$$

where $a_{i,j} \in L$ and define $F^*, F_0, F_1 \in L[X,Y] \setminus \{0\}$ as

$$F^* = \sum_{i=0}^{n_0} \sum_{j=0}^{n_1} \tau(a_{i,j}) X^i Y^j, \tag{4.5}$$

$$F_0(X,Y) = Y^{n_0}(1+X)^{n_0} F\left(\frac{(X+p^{-1}t^{-1})(X+p^{-1}t^{-1}\alpha^{-1})}{Y(1+X)}, X\right), \tag{4.6}$$

$$F_1(X,Y) = X^{n_1}(1+Y)^{n_1} F^*\left(Y, \frac{(Y+p^{-1}t^{-1})(Y+p^{-1}t^{-1}\alpha^{-1})}{X(1+Y)}\right), \tag{4.7}$$

respectively. Now we prove this lemma by dividing the proof into the following eight steps:

Step 1. *We prove that $F|F_1$ and $F^*|F_0$ in $L[X,Y]$.*

We find that $(f, \overline{f})$ is a zero of F and F_1, and $(\overline{f}, \overline{\overline{f}})$ is a zero of F^* and F_0. By the assumption $\operatorname{tr.deg} \mathcal{L}\langle f \rangle / \mathcal{L} = 1$, we see that $\overline{f}$ is transcendental over L, which implies $F|F_1$ and $F^*|F_0$, the required (cf. the book [17], Ch. II, §13, Lemma 2).

Step 2. *We prove $n_0 = n_1$.*

By using $F|F_1$ and $F^*|F_0$ in $L[X,Y]$, we get the following:

$$n_0 = \deg_X F \leq \deg_X F_1 \leq n_1, \tag{4.8}$$

$$n_0 \geq \deg_Y F_0 \geq \deg_Y F^* = \deg_Y F = n_1. \tag{4.9}$$

We set

$$n = n_0 = n_1, \tag{4.10}$$

and define $P \in L[X,Y]$ as

$$F_1 = PF. \tag{4.11}$$

Step 3. *We prove that the following equations hold*:

$$(Y+p^{-1}t^{-1})^n (Y+p^{-1}t^{-1}\alpha^{-1})^n \sum_{i=0}^{n} \tau(a_{i,n}) Y^i = P \sum_{i=0}^{n} a_{0,i} Y^i, \tag{4.12}$$

$$(1+Y)^j (Y+p^{-1}t^{-1})^{n-j} (Y+p^{-1}t^{-1}\alpha^{-1})^{n-j} \sum_{i=0}^{n} \tau(a_{i,n-j}) Y^i = P \sum_{i=0}^{n} a_{j,i} Y^i, \tag{4.13}$$

$$(1+Y)^n \sum_{i=0}^{n} \tau(a_{i,0}) Y^i = P \sum_{i=0}^{n} a_{n,i} Y^i, \tag{4.14}$$

where $j = 1, 2, \cdots, n-1$.

We find $P \in L[Y]$ because

$$\deg_X P = \deg_X F_1 - \deg_X F = 0. \tag{4.15}$$

We obtain

$$\begin{aligned} F_1(X,Y) &= \sum_{j=0}^{n} \left\{ (1+Y)^{n-j}(Y+p^{-1}t^{-1})^j (Y+p^{-1}t^{-1}\alpha^{-1})^j \sum_{i=0}^{n} \tau(a_{i,j}) Y^i \right\} X^{n-j} \\ &= \sum_{j=0}^{n} \left\{ (1+Y)^{j}(Y+p^{-1}t^{-1})^{n-j} (Y+p^{-1}t^{-1}\alpha^{-1})^{n-j} \sum_{i=0}^{n} \tau(a_{i,n-j}) Y^i \right\} X^{j}, \end{aligned} \tag{4.16}$$

$$PF(X,Y) = P \sum_{i,j=0}^{n} a_{i,j} X^i Y^j = \sum_{j,i=0}^{n} P a_{j,i} X^j Y^i = \sum_{j=0}^{n} \left(P \sum_{i=0}^{n} a_{j,i} Y^i \right) X^j, \tag{4.17}$$

By comparing coefficients of X of (4.11), we get (4.12)–(4.14).

Step 4. *We prove* $\sum_{i=0}^{n} a_{0,i} Y^i \neq 0$ *and* $\sum_{i=0}^{n} a_{n,i} Y^i \neq 0$.

Supposing $\sum_{i=0}^{n} a_{0,i} Y^i = 0$, we get

$$a_{0,n} = a_{1,n} = \cdots = a_{n,n} = 0, \tag{4.18}$$

from (4.12). This contradicts $\deg_Y F = n$.

Supposing $\sum_{i=0}^{n} a_{n,i} Y^i = 0$, we get

$$a_{n,0} = a_{n,1} = \cdots = a_{n,n} = 0, \tag{4.19}$$

This contradicts $\deg_X F = n$.

Step 5. *We prove that there are* $A_0 \in L$ *and* $l, m \in \mathbb{Z}_{\geq 0}$ *which satisfy*

$$P = A_0 (1+Y)^m (Y+p^{-1}t^{-1})^l (Y+p^{-1}t^{-1}\alpha^{-1})^{n-l}, \tag{4.20}$$

where $0 \leq l, m \leq n$.

We define l_1 and l_2 by $(Y+p^{-1}t^{-1})^{l_1} || P$ and $(Y+p^{-1}t^{-1}\alpha^{-1})^{l_2} || P$, respectively. We get

$$l_1 + l_2 = n, \tag{4.21}$$

because

$$l_1 + l_2 \geq n, \tag{4.22}$$

$$l_1 + l_2 \leq n, \tag{4.23}$$

hold from (4.12) and (4.14), respectively. We set

$$l = l_1. \tag{4.24}$$

We get

$$(Y+p^{-1}t^{-1})^l (Y+p^{-1}t^{-1}\alpha^{-1})^{n-l} || \sum_{i=0}^{n} \tau(a_{i,0}) Y^i, \tag{4.25}$$

from (4.14). Considering the coefficient of Y^n of the above, we get

$$\sum_{i=0}^{n} \tau(a_{i,0})Y^i = \tau(a_{n,0})(Y+p^{-1}t^{-1})^l(Y+p^{-1}t^{-1}\alpha^{-1})^{n-l}. \tag{4.26}$$

Substituting this into (4.14), we get

$$\tau(a_{n,0})(1+Y)^n(Y+p^{-1}t^{-1})^l(Y+p^{-1}t^{-1}\alpha^{-1})^{n-l} = P\sum_{i=0}^{n} a_{n,i}Y^i. \tag{4.27}$$

Therefore we can set

$$P = A_0(1+Y)^m(Y+p^{-1}t^{-1})^l(Y+p^{-1}t^{-1}\alpha^{-1})^{n-l}. \tag{4.28}$$

Step 6. *We prove $a_{n,n-m} \neq 0$ and $a_{m,n} \neq 0$.*

By using (4.20) and (4.26) in (4.14), we get

$$\tau(a_{n,0})(1+Y)^{n-m} = A_0\sum_{i=0}^{n} a_{n,i}Y^i. \tag{4.29}$$

Comparing the coefficients of Y^{n-m} of (4.29), we get

$$a_{n,n-m} \neq 0. \tag{4.30}$$

By using (4.20) in (4.12), we get

$$(Y+p^{-1}t^{-1})^{n-l}(Y+p^{-1}t^{-1}\alpha^{-1})^l\sum_{i=0}^{n}\tau(a_{i,n})Y^i = A_0(1+Y)^m\sum_{i=0}^{n} a_{0,i}Y^i. \tag{4.31}$$

From (4.31), we get

$$(Y+p^{-1}t^{-1})^{n-l}(Y+p^{-1}t^{-1}\alpha^{1})^l \| \sum_{i=0}^{n} a_{0,i}Y^i, \tag{4.32}$$

$$\deg_Y\left(\sum_{i=0}^{n}\tau(a_{i,n})Y^i\right) = m. \tag{4.33}$$

Therefore we obtain $a_{m,n} \neq 0$.

Step 7. *We prove $2m = n$.*

By using (4.20) and (4.26) in (4.13), we get

$$\begin{aligned}&(Y+p^{-1}t^{-1})^{n-m}(Y+p^{-1}t^{-1}\alpha^{-1})^{n-m}\sum_{i=0}^{n}\tau(a_{i,n-m})Y^i\\ &\quad = A_0(Y+p^{-1}t^{-1})^l(Y+p^{-1}t^{-1}\alpha^{-1})^{n-l}\sum_{i=0}^{n} a_{m,i}Y^i.\end{aligned} \tag{4.34}$$

By comparing degrees of Y of (4.34)

$$2m = n. \tag{4.35}$$

Step 8. *We prove that the following equations hold*:

$$\tau(a_{0,0}) = p^{-n}\alpha^{l-n}t^{-n}\tau(a_{n,0}), \tag{4.36}$$
$$\tau(a_{n,0}) = A_0 a_{n,0}, \tag{4.37}$$
$$\tau(a_{n,0}) = A_0 a_{n,m}, \tag{4.38}$$
$$\tau(a_{0,n}) = A_0 p^n \alpha^l t^n a_{0,0}, \tag{4.39}$$
$$\tau(a_{m,n}) = A_0 a_{0,n}, \tag{4.40}$$
$$\tau(a_{n,m}) = A_0 a_{m,n}. \tag{4.41}$$

From the coefficient of Y^0 of (4.26), we get (4.36). From the coefficients of Y^0 and Y^m of (4.29), we get (4.37) and (4.38), respectively. From the coefficients of Y^0 and Y^{n+m} of (4.31), we get (4.39) and (4.40), respectively. From the coefficient of Y^{2n} of (4.34), we get (4.41).

Now we prove Lemma 4.2. From (4.37) and (4.38), we get

$$a_{n,0} = a_{n,m}. \tag{4.42}$$

By using (4.36), (4.37), (4.39), (4.40), (4.41), and (4.42), we obtain

$$\tau(a_{0,0}) = p^{-n}\alpha^{l-n}t^{-n}\tau(a_{n,0}) \tag{4.43}$$
$$\Leftrightarrow a_{0,0} = \alpha^{l-n}t^{-n}a_{n,0} \tag{4.44}$$
$$\Leftrightarrow \tau(a_{0,n}) = A_0 p^n \alpha^{2l-n} a_{n,0} \tag{4.45}$$
$$\Leftrightarrow \tau(a_{0,n}) = p^n \alpha^{2l-n}\tau(a_{n,0}) \tag{4.46}$$
$$\Leftrightarrow a_{0,n} = p^n \alpha^{2l-n} a_{n,0} \tag{4.47}$$
$$\Leftrightarrow \tau(a_{m,n}) = A_0 p^n \alpha^{2l-n} a_{n,0} \tag{4.48}$$
$$\Leftrightarrow \tau(a_{m,n}) = p^n \alpha^{2l-n}\tau(a_{n,0}) \tag{4.49}$$
$$\Leftrightarrow a_{m,n} = p^n \alpha^{2l-n} a_{n,0} \tag{4.50}$$
$$\Leftrightarrow \tau(a_{n,m}) = A_0 p^n \alpha^{2l-n} a_{n,0} \tag{4.51}$$
$$\Leftrightarrow \tau(a_{n,m}) = p^n \alpha^{2l-n}\tau(a_{n,0}) \tag{4.52}$$
$$\Leftrightarrow a_{n,m} = p^n \alpha^{2l-n} a_{n,0} \tag{4.53}$$
$$\Leftrightarrow \alpha^{n-2l} = p^n. \tag{4.54}$$

We also get

$$2l \neq n, \tag{4.55}$$

because p is not a root of unity. ■

In order to prove Theorem 4.1, we use the following lemma:

Lemma 4.3. Let $\mathcal{L}$ be an inversive difference overfield of $(\mathbb{C}(t), t \mapsto pt)$ and $\mathcal{U}$ a difference overfield of $\mathcal{L}$. Using the Bäcklund transformations, (2.11) and (2.12), we find that if there is a solution $f \in \mathcal{U}$ to (4.1) with $\alpha = A$ satisfying $\operatorname{tr.deg} \mathcal{L}\langle f\rangle/\mathcal{L} = 1$, then for all $j \in \mathbb{Z}$, there is a solution $g \in \mathcal{U}$ to (4.1) with $\alpha = p^j A$ satisfying $\operatorname{tr.deg} \mathcal{L}\langle g\rangle/\mathcal{L} = 1$.

Now we prove Theorem 4.1 by using Lemma 4.2 and Lemma 4.3.

Proof of theorem 4.1. We assume $\operatorname{tr.deg} \mathcal{L}\langle f\rangle/\mathcal{L} = 1$. We will derive a contradiction. We consider the set Φ of all $(A, j) \in \mathbb{C}^\times \times \mathbb{Z}_{\geq 0}$ satisfying the following conditions: (i) there is a solution g to (4.1) with $\alpha = A$ such that $\operatorname{tr.deg} \mathcal{L}\langle g\rangle/\mathcal{L} = 1$; (ii) there is $i \in \mathbb{Z} \setminus \{0\}$ which

satisfies $A^i = p^j$. We find $\Phi \neq \{\}$ by Lemma 4.2. We choose $(A_1, k) \in \Phi$ whose k is minimum. There is $i \in \mathbb{Z} \setminus \{0\}$ which satisfies

$$ {A_1}^i = p^k, \tag{4.56} $$

and from Lemma 4.2, there are $n, l \in \mathbb{Z}_{\geq 0}$ which satisfy

$$ {A_1}^{n-2l} = p^n, \tag{4.57} $$

where $0 \leq l \leq n$, $n \neq 0$ and $2l \neq n$. Supposing $k = 0$, we get

$$ p^{in} = {A_1}^{(n-2l)i} = 1, \tag{4.58} $$

from (4.57) because

$$ {A_1}^i = 1, \tag{4.59} $$

from (4.56). This contradicts the assumption that p is not a root of unity. Therefore

$$ k \neq 0. \tag{4.60} $$

We obtain

$$ in = k(n - 2l), \tag{4.61} $$

because

$$ p^n = {A_1}^{n-2l} \Rightarrow p^{in} = {A_1}^{i(n-2l)} \Leftrightarrow p^{in} = p^{k(n-2l)} \Leftrightarrow in = k(n - 2l), \tag{4.62} $$

from (4.56) and (4.57).

Now we consider by dividing the range of l into the following four types:

(i) $0 < 2l < n$**.** We find $(p^{-1}A_1, |k - i|) \in \Phi$ because

$$ (p^{-1}A_1)^i = p^{-i}{A_1}^i = p^{k-i}. \tag{4.63} $$

This contradicts the minimality of k because we get

$$ \begin{aligned} & 0 < 2l < n && (4.64)\\ & \Leftrightarrow 0 < n - 2l < n && (4.65)\\ & \Leftrightarrow 0 < \frac{k(n-2l)}{n} < k && (4.66)\\ & \Leftrightarrow 0 < i < k && (4.67)\\ & \Leftrightarrow -k < -i < 0 && (4.68)\\ & \Leftrightarrow 0 < k - i < k && (4.69)\\ & \Leftrightarrow |k - i| < k, && (4.70) \end{aligned} $$

from (4.61).

(ii) $n < 2l < 2n$**.** In the same way as (i), we can prove the contradiction.

(iii) $l = 0$**.** We get

$$A_1{}^n = p^n, \tag{4.71}$$

from (4.57). From Lemma 4.3, we find that the assumption holds for $\alpha = p^{-1}A_1$. From Lemma 4.2, there is $n' \in \mathbb{Z}_{>0}$ and $l' \in \mathbb{Z}_{\geq 0}$ which satisfy

$$(p^{-1}A_1)^{n'-2l'} = p^{n'} \tag{4.72}$$

and $n' \geq l'$. This contradicts that p is not a root of unity from

$$p^{nn'} = \left((p^{-1}A_1)^n\right)^{n'-2l'} = 1. \tag{4.73}$$

(iv) $l = n$**.** In the same way as (iii), we can prove the incoherence.

Therefore we find a contradiction in any case, and so we conclude $\operatorname{tr.deg} \mathcal{L}\langle f\rangle/\mathcal{L} \neq 1$, which implies

$$\operatorname{tr.deg} \mathcal{L}\langle f\rangle/\mathcal{L} \leq 1 \Rightarrow f \text{ is algebraic over } L, \tag{4.74}$$

the required. ■

5 Concluding remarks

In this paper, we have studied algebraic function solutions to $q\text{-P}_{\mathrm{III}}^{D_7^{(1)}}$ and proved its irreducibility.

Before closing, we mention a determinant formula of algebraic function solutions to $q\text{-P}_{\mathrm{III}}^{D_7^{(1)}}$. As mentioned in Section 3.1, K. Kajiwara et al. anticipate the determinant formula of algebraic function solutions to $\text{P}_{\mathrm{III}}^{D_7^{(1)}}$. By the continuous limit, the Laurent polynomials are reduced to the determinants of which the determinant formula above are composed. This gives us expectation that each of the Laurent polynomials has an analogous determinant expression.

Acknowledgement. The authors thank Prof. J. Hietarinta, Prof. K. Kajiwara, and Prof. T. Masuda for the useful comments on algebraic function solutions to Painlevé systems. This work has been partially supported by the JSPS Research Fellowship.

References

[1] R.M. Cohn, Difference Algebra, Interscience Publishers, (New York · London · Sydney, 1965).

[2] G. Gasper and M. Rahman, Basic Hypergeometric Series (Second edition), Encyclopedia of Mathematics and Its Applications **96** (Cambridge University Press, Cambridge, 2004).

[3] B. Grammaticos and A. Ramani, Discrete Painlevé equations: a review, Lect. Notes Phys. **644** (2004) 245–321.

[4] K. Kajiwara, N. Nakazono and T. Tsuda, Projective reduction of the discrete Painlevé system of type $(A_2 + A_1)^{(1)}$, Int. Math. Res. Not. **2011** (2011) 930–966.

[5] R. Koekoek, P.A. Lesky and R.F. Swarttouw, Hypergeometric orthogonal polynomials and their q-analogues, Springer Monographs in Mathematics. Springer-Verlag, Berlin, 2010.

[6] A. Levin, Difference Algebra, (Springer Science+Business Media B.V., 2008).

[7] T. Masuda, Hypergeometric τ-functions of the q-Painlevé system of type $E_7^{(1)}$, *SIGMA Symmetry Integrability Geom. Methods Appl.* **5** (2009).

[8] T. Masuda, Hypergeometric τ-functions of the q-Painlevé system of type $E_8^{(1)}$, Ramanujan J. **24** (2011).

[9] N. Nakazono, Hypergeometric τ Functions of the q-Painlevé Systems of Type $(A_2+A_1)^{(1)}$, *SIGMA Symmetry Integrability Geom. Methods Appl.* **6** (2010).

[10] S. Nishioka, Solvability and irreducibility of difference equations, Dr. thesis (2010).

[11] S. Nishioka, Decomposable extensions of difference fields, Funkcial. Ekvac. **53** (2010) 489–501.

[12] M. Noumi, Painlevé equations through symmetry (American Mathematical Society, Providence, 2004).

[13] Y. Ohyama, H. Kawamuko, H. Sakai and K. Okamoto, Studies on the Painlevé equations. V. Third Painlevé equations of special type $P_{\mathrm{III}}(D_7)$ and $P_{\mathrm{III}}(D_8)$, J. Math. Sci. Univ. Tokyo **13** (2006) 145–204.

[14] A. Ramani, B. Grammaticos and J. Hietarinta, Discrete versions of the Painlevé equations, Phys. Rev. Lett. **67** (1991) 1829–1832.

[15] H. Sakai, Rational surfaces associated with affine root systems and geometry of the Painlevé equations, Comm. Math. Phys. **220** (2001) 165–229.

[16] T. Tsuda, Tau functions of q-Painlevé III and IV equations, Lett. Math. Phys. **75** (2006) 39–47.

[17] O. Zariski and P. Samuel, Commutative Algebra Volume I, (Springer-Verlag, New York, NY, 1958).

List of MI Preprint Series, Kyushu University

The Global COE Program
Math-for-Industry Education & Research Hub

MI

MI2008-1 Takahiro ITO, Shuichi INOKUCHI & Yoshihiro MIZOGUCHI
Abstract collision systems simulated by cellular automata

MI2008-2 Eiji ONODERA
The intial value problem for a third-order dispersive flow into compact almost Hermitian manifolds

MI2008-3 Hiroaki KIDO
On isosceles sets in the 4-dimensional Euclidean space

MI2008-4 Hirofumi NOTSU
Numerical computations of cavity flow problems by a pressure stabilized characteristic-curve finite element scheme

MI2008-5 Yoshiyasu OZEKI
Torsion points of abelian varieties with values in nfinite extensions over a p-adic field

MI2008-6 Yoshiyuki TOMIYAMA
Lifting Galois representations over arbitrary number fields

MI2008-7 Takehiro HIROTSU & Setsuo TANIGUCHI
The random walk model revisited

MI2008-8 Silvia GANDY, Masaaki KANNO, Hirokazu ANAI & Kazuhiro YOKOYAMA
Optimizing a particular real root of a polynomial by a special cylindrical algebraic decomposition

MI2008-9 Kazufumi KIMOTO, Sho MATSUMOTO & Masato WAKAYAMA
Alpha-determinant cyclic modules and Jacobi polynomials

MI2008-10 Sangyeol LEE & Hiroki MASUDA
Jarque-Bera Normality Test for the Driving Lévy Process of a Discretely Observed Univariate SDE

MI2008-11 Hiroyuki CHIHARA & Eiji ONODERA
A third order dispersive flow for closed curves into almost Hermitian manifolds

MI2008-12 Takehiko KINOSHITA, Kouji HASHIMOTO and Mitsuhiro T. NAKAO
On the L^2 a priori error estimates to the finite element solution of elliptic problems with singular adjoint operator

MI2008-13 Jacques FARAUT and Masato WAKAYAMA
Hermitian symmetric spaces of tube type and multivariate Meixner-Pollaczek polynomials

MI2008-14 Takashi NAKAMURA
Riemann zeta-values, Euler polynomials and the best constant of Sobolev inequality

MI2008-15 Takashi NAKAMURA
Some topics related to Hurwitz-Lerch zeta functions

MI2009-1 Yasuhide FUKUMOTO
Global time evolution of viscous vortex rings

MI2009-2 Hidetoshi MATSUI & Sadanori KONISHI
Regularized functional regression modeling for functional response and predictors

MI2009-3 Hidetoshi MATSUI & Sadanori KONISHI
Variable selection for functional regression model via the L_1 regularization

MI2009-4 Shuichi KAWANO & Sadanori KONISHI
Nonlinear logistic discrimination via regularized Gaussian basis expansions

MI2009-5 Toshiro HIRANOUCHI & Yuichiro TAGUCHII
Flat modules and Groebner bases over truncated discrete valuation rings

MI2009-6 Kenji KAJIWARA & Yasuhiro OHTA
Bilinearization and Casorati determinant solutions to non-autonomous 1+1 dimensional discrete soliton equations

MI2009-7 Yoshiyuki KAGEI
Asymptotic behavior of solutions of the compressible Navier-Stokes equation around the plane Couette flow

MI2009-8 Shohei TATEISHI, Hidetoshi MATSUI & Sadanori KONISHI
Nonlinear regression modeling via the lasso-type regularization

MI2009-9 Takeshi TAKAISHI & Masato KIMURA
Phase field model for mode III crack growth in two dimensional elasticity

MI2009-10 Shingo SAITO
Generalisation of Mack's formula for claims reserving with arbitrary exponents for the variance assumption

MI2009-11 Kenji KAJIWARA, Masanobu KANEKO, Atsushi NOBE & Teruhisa TSUDA
Ultradiscretization of a solvable two-dimensional chaotic map associated with the Hesse cubic curve

MI2009-12 Tetsu MASUDA
Hypergeometric τ-functions of the q-Painlevé system of type $E_8^{(1)}$

MI2009-13 Hidenao IWANE, Hitoshi YANAMI, Hirokazu ANAI & Kazuhiro YOKOYAMA
A Practical Implementation of a Symbolic-Numeric Cylindrical Algebraic Decomposition for Quantifier Elimination

MI2009-14 Yasunori MAEKAWA
On Gaussian decay estimates of solutions to some linear elliptic equations and its applications

MI2009-15 Yuya ISHIHARA & Yoshiyuki KAGEI
Large time behavior of the semigroup on L^p spaces associated with the linearized compressible Navier-Stokes equation in a cylindrical domain

MI2009-16 Chikashi ARITA, Atsuo KUNIBA, Kazumitsu SAKAI & Tsuyoshi SAWABE
Spectrum in multi-species asymmetric simple exclusion process on a ring

MI2009-17 Masato WAKAYAMA & Keitaro YAMAMOTO
Non-linear algebraic differential equations satisfied by certain family of elliptic functions

MI2009-18 Me Me NAING & Yasuhide FUKUMOTO
Local Instability of an Elliptical Flow Subjected to a Coriolis Force

MI2009-19 Mitsunori KAYANO & Sadanori KONISHI
Sparse functional principal component analysis via regularized basis expansions and its application

MI2009-20 Shuichi KAWANO & Sadanori KONISHI
Semi-supervised logistic discrimination via regularized Gaussian basis expansions

MI2009-21 Hiroshi YOSHIDA, Yoshihiro MIWA & Masanobu KANEKO
Elliptic curves and Fibonacci numbers arising from Lindenmayer system with symbolic computations

MI2009-22 Eiji ONODERA
A remark on the global existence of a third order dispersive flow into locally Hermitian symmetric spaces

MI2009-23 Stjepan LUGOMER & Yasuhide FUKUMOTO
Generation of ribbons, helicoids and complex scherk surface in laser-matter Interactions

MI2009-24 Yu KAWAKAMI
Recent progress in value distribution of the hyperbolic Gauss map

MI2009-25 Takehiko KINOSHITA & Mitsuhiro T. NAKAO
On very accurate enclosure of the optimal constant in the a priori error estimates for H_0^2-projection

MI2009-26 Manabu YOSHIDA
Ramification of local fields and Fontaine's property (Pm)

MI2009-27 Yu KAWAKAMI
Value distribution of the hyperbolic Gauss maps for flat fronts in hyperbolic three-space

MI2009-28 Masahisa TABATA
Numerical simulation of fluid movement in an hourglass by an energy-stable finite element scheme

MI2009-29 Yoshiyuki KAGEI & Yasunori MAEKAWA
Asymptotic behaviors of solutions to evolution equations in the presence of translation and scaling invariance

MI2009-30 Yoshiyuki KAGEI & Yasunori MAEKAWA
On asymptotic behaviors of solutions to parabolic systems modelling chemotaxis

MI2009-31 Masato WAKAYAMA & Yoshinori YAMASAKI
Hecke's zeros and higher depth determinants

MI2009-32 Olivier PIRONNEAU & Masahisa TABATA
Stability and convergence of a Galerkin-characteristics finite element scheme of lumped mass type

MI2009-33 Chikashi ARITA
Queueing process with excluded-volume effect

MI2009-34 Kenji KAJIWARA, Nobutaka NAKAZONO & Teruhisa TSUDA
Projective reduction of the discrete Painlevé system of type$(A_2 + A_1)^{(1)}$

MI2009-35 Yosuke MIZUYAMA, Takamasa SHINDE, Masahisa TABATA & Daisuke TAGAMI
Finite element computation for scattering problems of micro-hologram using DtN map

MI2009-36 Reiichiro KAWAI & Hiroki MASUDA
Exact simulation of finite variation tempered stable Ornstein-Uhlenbeck processes

MI2009-37 Hiroki MASUDA
On statistical aspects in calibrating a geometric skewed stable asset price model

MI2010-1 Hiroki MASUDA
Approximate self-weighted LAD estimation of discretely observed ergodic Ornstein-Uhlenbeck processes

MI2010-2 Reiichiro KAWAI & Hiroki MASUDA
Infinite variation tempered stable Ornstein-Uhlenbeck processes with discrete observations

MI2010-3 Kei HIROSE, Shuichi KAWANO, Daisuke MIIKE & Sadanori KONISHI
Hyper-parameter selection in Bayesian structural equation models

MI2010-4 Nobuyuki IKEDA & Setsuo TANIGUCHI
The Itô-Nisio theorem, quadratic Wiener functionals, and 1-solitons

MI2010-5 Shohei TATEISHI & Sadanori KONISHI
Nonlinear regression modeling and detecting change point via the relevance vector machine

MI2010-6 Shuichi KAWANO, Toshihiro MISUMI & Sadanori KONISHI
Semi-supervised logistic discrimination via graph-based regularization

MI2010-7 Teruhisa TSUDA
UC hierarchy and monodromy preserving deformation

MI2010-8 Takahiro ITO
Abstract collision systems on groups

MI2010-9 Hiroshi YOSHIDA, Kinji KIMURA, Naoki YOSHIDA, Junko TANAKA & Yoshihiro MIWA
An algebraic approach to underdetermined experiments

MI2010-10 Kei HIROSE & Sadanori KONISHI
Variable selection via the grouped weighted lasso for factor analysis models

MI2010-11 Katsusuke NABESHIMA & Hiroshi YOSHIDA
Derivation of specific conditions with Comprehensive Groebner Systems

MI2010-12 Yoshiyuki KAGEI, Yu NAGAFUCHI & Takeshi SUDOU
Decay estimates on solutions of the linearized compressible Navier-Stokes equation around a Poiseuille type flow

MI2010-13 Reiichiro KAWAI & Hiroki MASUDA
On simulation of tempered stable random variates

MI2010-14 Yoshiyasu OZEKI
Non-existence of certain Galois representations with a uniform tame inertia weight

MI2010-15 Me Me NAING & Yasuhide FUKUMOTO
Local Instability of a Rotating Flow Driven by Precession of Arbitrary Frequency

MI2010-16 Yu KAWAKAMI & Daisuke NAKAJO
The value distribution of the Gauss map of improper affine spheres

MI2010-17 Kazunori YASUTAKE
On the classification of rank 2 almost Fano bundles on projective space

MI2010-18 Toshimitsu TAKAESU
Scaling limits for the system of semi-relativistic particles coupled to a scalar bose field

MI2010-19 Reiichiro KAWAI & Hiroki MASUDA
Local asymptotic normality for normal inverse Gaussian Lévy processes with high-frequency sampling

MI2010-20 Yasuhide FUKUMOTO, Makoto HIROTA & Youichi MIE
Lagrangian approach to weakly nonlinear stability of an elliptical flow

MI2010-21 Hiroki MASUDA
Approximate quadratic estimating function for discretely observed Lévy driven SDEs with application to a noise normality test

MI2010-22 Toshimitsu TAKAESU
A Generalized Scaling Limit and its Application to the Semi-Relativistic Particles System Coupled to a Bose Field with Removing Ultraviolet Cutoffs

MI2010-23 Takahiro ITO, Mitsuhiko FUJIO, Shuichi INOKUCHI & Yoshihiro MIZOGUCHI
Composition, union and division of cellular automata on groups

MI2010-24 Toshimitsu TAKAESU
A Hardy's Uncertainty Principle Lemma in Weak Commutation Relations of Heisenberg-Lie Algebra

MI2010-25 Toshimitsu TAKAESU
On the Essential Self-Adjointness of Anti-Commutative Operators

MI2010-26 Reiichiro KAWAI & Hiroki MASUDA
On the local asymptotic behavior of the likelihood function for Meixner Lévy processes under high-frequency sampling

MI2010-27 Chikashi ARITA & Daichi YANAGISAWA
Exclusive Queueing Process with Discrete Time

MI2010-28 Jun-ichi INOGUCHI, Kenji KAJIWARA, Nozomu MATSUURA & Yasuhiro OHTA
Motion and Bäcklund transformations of discrete plane curves

MI2010-29 Takanori YASUDA, Masaya YASUDA, Takeshi SHIMOYAMA & Jun KOGURE
On the Number of the Pairing-friendly Curves

MI2010-30 Chikashi ARITA & Kohei MOTEGI
Spin-spin correlation functions of the q-VBS state of an integer spin model

MI2010-31 Shohei TATEISHI & Sadanori KONISHI
Nonlinear regression modeling and spike detection via Gaussian basis expansions

MI2010-32 Nobutaka NAKAZONO
Hypergeometric τ functions of the q-Painlevé systems of type $(A_2 + A_1)^{(1)}$

MI2010-33 Yoshiyuki KAGEI
Global existence of solutions to the compressible Navier-Stokes equation around parallel flows

MI2010-34 Nobushige KUROKAWA, Masato WAKAYAMA & Yoshinori YAMASAKI
Milnor-Selberg zeta functions and zeta regularizations

MI2010-35 Kissani PERERA & Yoshihiro MIZOGUCHI
Laplacian energy of directed graphs and minimizing maximum outdegree algorithms

MI2010-36 Takanori YASUDA
CAP representations of inner forms of $Sp(4)$ with respect to Klingen parabolic subgroup

MI2010-37 Chikashi ARITA & Andreas SCHADSCHNEIDER
Dynamical analysis of the exclusive queueing process

MI2011-1 Yasuhide FUKUMOTO& Alexander B. SAMOKHIN
Singular electromagnetic modes in an anisotropic medium

MI2011-2 Hiroki KONDO, Shingo SAITO & Setsuo TANIGUCHI
Asymptotic tail dependence of the normal copula

MI2011-3 Takehiro HIROTSU, Hiroki KONDO, Shingo SAITO, Takuya SATO, Tatsushi TANAKA & Setsuo TANIGUCHI
Anderson-Darling test and the Malliavin calculus

MI2011-4 Hiroshi INOUE, Shohei TATEISHI & Sadanori KONISHI
Nonlinear regression modeling via Compressed Sensing

MI2011-5 Hiroshi INOUE
Implications in Compressed Sensing and the Restricted Isometry Property

MI2011-6 Daeju KIM & Sadanori KONISHI
Predictive information criterion for nonlinear regression model based on basis expansion methods

MI2011-7 Shohei TATEISHI, Chiaki KINJYO & Sadanori KONISHI
Group variable selection via relevance vector machine

MI2011-8 Jan BREZINA & Yoshiyuki KAGEI
Decay properties of solutions to the linearized compressible Navier-Stokes equation around time-periodic parallel flow
Group variable selection via relevance vector machine

MI2011-9 Chikashi ARITA, Arvind AYYER, Kirone MALLICK & Sylvain PROLHAC
Recursive structures in the multispecies TASEP

MI2011-10 Kazunori YASUTAKE
On projective space bundle with nef normalized tautological line bundle

MI2011-11 Hisashi ANDO, Mike HAY, Kenji KAJIWARA & Tetsu MASUDA
An explicit formula for the discrete power function associated with circle patterns of Schramm type

MI2011-12 Yoshiyuki KAGEI
Asymptotic behavior of solutions to the compressible Navier-Stokes equation around a parallel flow

MI2011-13 Vladimír CHALUPECKÝ & Adrian MUNTEAN
Semi-discrete finite difference multiscale scheme for a concrete corrosion model: approximation estimates and convergence

MI2011-14 Jun-ichi INOGUCHI, Kenji KAJIWARA, Nozomu MATSUURA & Yasuhiro OHTA
Explicit solutions to the semi-discrete modified KdV equation and motion of discrete plane curves

MI2011-15 Hiroshi INOUE
A generalization of restricted isometry property and applications to compressed sensing

MI2011-16 Yu KAWAKAMI
A ramification theorem for the ratio of canonical forms of flat surfaces in hyperbolic three-space

MI2011-17 Naoyuki KAMIYAMA
Matroid intersection with priority constraints

MI2012-1 Kazufumi KIMOTO & Masato WAKAYAMA
Spectrum of non-commutative harmonic oscillators and residual modular forms

MI2012-2 Hiroki MASUDA
Mighty convergence of the Gaussian quasi-likelihood random fields for ergodic Levy driven SDE observed at high frequency

MI2012-3 Hiroshi INOUE
A Weak RIP of theory of compressed sensing and LASSO

MI2012-4 Yasuhide FUKUMOTO & Youich MIE
Hamiltonian bifurcation theory for a rotating flow subject to elliptic straining field

MI2012-5 Yu KAWAKAMI
On the maximal number of exceptional values of Gauss maps for various classes of surfaces

MI2012-6 Marcio GAMEIRO, Yasuaki HIRAOKA, Shunsuke IZUMI, Miroslav KRAMAR, Konstantin MISCHAIKOW & Vidit NANDA
Topological Measurement of Protein Compressibility via Persistence Diagrams

MI2012-7 Nobutaka NAKAZONO & Seiji NISHIOKA
Solutions to a q-analog of Painlevé III equation of type $D_7^{(1)}$