九州大学学術情報リポジトリ
Kyushu University Institutional Repository

Transient Behavior of Activated Carbon Fiber-Ethanol Based Two-Stage Adsorption Chiller

El-Sharkawy, Ibrahim Ibrahim
Interdisciplinary Graduate School of Engineering Science, Kyushu University

Saha, Bidyut Baran
Interdisciplinary Graduate School of Engineering Science, Kyushu University

Chakraborty, Anutosh
Interdisciplinary Graduate School of Engineering Science, Kyushu University

Hassan, Mahmoud
Interdisciplinary Graduate School of Engineering Science, Kyushu University

他

https://doi.org/10.15017/14607

出版情報：九州大学大学院総合理工学報告. 30 (1), pp.58-63, 2008-06. 九州大学大学院総合理工学府
バージョン：
権利関係：

九 州 大 学 大 学 院 総 合 理 工 学 報 告
第30巻　第1号　58-63頁　平成20年6月

Engineering Sciences Reports, Kyushu University
Vol. 30, No. 1, pp. 58-63, JUN. 2008

Transient Behavior of Activated Carbon Fiber–Ethanol Based Two–Stage Adsorption Chiller

Ibrahim Ibrahim El-SHARKAWY *1, Bidyut Baran SAHA*1,†,
Anutosh CHAKRABORTY*1, Mahmoud HASSAN*1, Shigeru KOYAMA*1
†E-mail of corresponding author: *bidyutb@cm.kyushu-u.ac.jp*

(Received 30 April 2008)

In this study, an analytical investigation on the performance of a low temperature solar or waste heat driven two-stage adsorption chiller is performed. Activated carbon fiber (ACF) of type (A-20) and ethanol are used as adsorbent-refrigerant pair. This innovative system can be driven by heat source of temperature between 50 and 70°C in combination with a heat sink of 30°C. A mathematical model is developed to analyze the dynamic behavior of the cycle as well as the influence of operating conditions on the cycle performance in terms of cooling capacity and COP. The main advantage of this advanced chiller is that it can be operational with smaller regenerating temperature lifts (ΔT_{reg} = heat source − heat sink inlet temperatures) than other heat-driven single-stage adsorption systems.

Key words: *Activated carbon fiber, Adsorption chiller, Ethanol, Two-stage*

1. Introduction

Heat driven adsorption cooling systems seems to be an attractive alternative of vapor compression systems, as these systems do not utilize electricity as the driving heat sources and utilize mainly non-toxic and environmentally friendly refrigerants. Several heat-pumps and refrigeration applications have been studied using various adsorbent-adsorbate pairs such as activated carbon-ammonia, activated carbon-methanol, silica gel-water, activated carbon fiber-ethanol and zeolite-water pairs.[1,5] Most of adsorption cooling cycles require medium and/or high temperature heat sources. However, silica gel-water, activated-carbon (AC)-methanol, ACFs-ethanol adsorption cooling systems can be driven by heat of relatively low, near-ambient temperatures, so that waste heat below 100°C can be used effectively. To utilize heating source temperature nearly ambient (~50°C), Saha et al.[6] analyzed experimentally a multi-stage silica gel-water adsorption chiller, however the performance of this system is quite low.

From the above mentioned perspectives, this study deals with the utilization of unexploited, near ambient temperature (between 50 and 70°C) solar or waste heat as the driving heat source with a coolant of 30°C, and presents the theoretical analysis of a two-stage advance adsorption cooling system where ACF (A-20) and ethanol are used as adsorbent-adsorbate pair. Temperature profiles of all the system components (adsorber, desorber, condenser and evaporator) have been investigated. The influences of heat transfer fluid temperature on the system performance in terms of cooling capacity and COP are also investigated.

2. Two-Stage Adsorption Cooling Cycle

Figure 1 shows the conceptual pressure-temperature-concentration (P-T-W) diagram of a conventional and an advanced two-stage adsorption chillers. It can be noticed that the minimum regeneration temperature of the single-stage cycle could be higher than about 56°C with an evaporator temperature of 7°C along with a coolant of temperature 30°C. For practical utilization of renewable energy sources such as solar energy, an advanced (two-stage) adsorption cooling system is presented here. The operation of this cycle is based on splitting the temperature lift of adsorbent ($\Delta T = T_{cond} - T_{evap}$) into two smaller temperature lifts. The refrigerant pressure is therefore rises into two progressive pressure steps from the

*1 Interdisciplinary Graduate School of Engineering Sciences, Kyushu University, Japan

evaporator pressure to the condenser pressure. To achieve this condition, two additional sorption elements are added to the conventional system as shown in Fig. 2. The system is then comprises of six heat exchangers, namely, a condenser, an evaporator and two pairs of sorption elements. The cycle operation consists of four modes, namely mode A, B, C and D, respectively. In mode A, which is shown in Fig. 2, valves 1, 3 and 5 (V1, V3 and V5) are opened to allow refrigerant flow between heat exchangers. The sorption elements 1 and 4 (SE1 and SE4) are heated by hot water while the sorption elements 2 and 3 (SE2 and SE3) are cooled by cooling water. The ACF in each sorption element is fixed inside the container, i.e. packed between the fins and covered by carbon based fine mesh net so that it cannot be rotated or moved. Hence an uninterrupted supply of cooling energy requires operating as a pseudo-continuous cycle, where adsorption and desorption occur concomitantly and sorption elements repeatedly switch between adsorption and desorption modes. Refrigerant (ethanol), evaporates inside the evaporator, picking up evaporation heat from the chilled water, is adsorbed by adsorber 2 via valve 3. Sorption element 3 also adsorbs refrigerant from the desorber 4 via valve 5. Desorber 1 is connected to the condenser via valve 1. The desorbed refrigerant vapor is condensed in the condenser at temperature T_{cond}; cooling water removes the condensation heat Q_{cond}. This condensed refrigerant comes back to the evaporator via the tube connecting condenser and evaporator to complete the cycle. The tube is bent to achieve a pressure drop resulting in the refrigerant being in liquid phase in the evaporator. When refrigerant concentrations in the adsorbers and desorbers are at or near their equilibrium level, the flows of hot and cooling water are redirected by switching the valves so that the desorbers switch into adsorption modes and the adsorbers change into desorption operations. During the short intermediate process (mode B) no adsorption/desorption occurs. This time is needed to preheat the adsorbers and pre-cool the desorbers. In mode C, valves V1, V3 and V5 are closed and valves V2, V4 and V6 are opened. Sorption elements SE2 and SE3 are in desorption mode while SE1 and SE4 are in adsorption mode. In this mode, the sorption element SE2 is connected with the SE1 through the valve V2. As, SE2 is heated by hot water (in desorption mode) and SE1 is cooled by cooling water (in adsorption mode), the

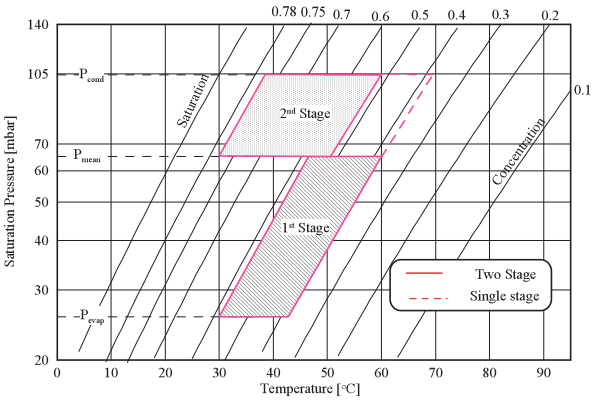

Fig. 1. Conceptual Dühring diagram for two and single stage adsorption cooling cycle.

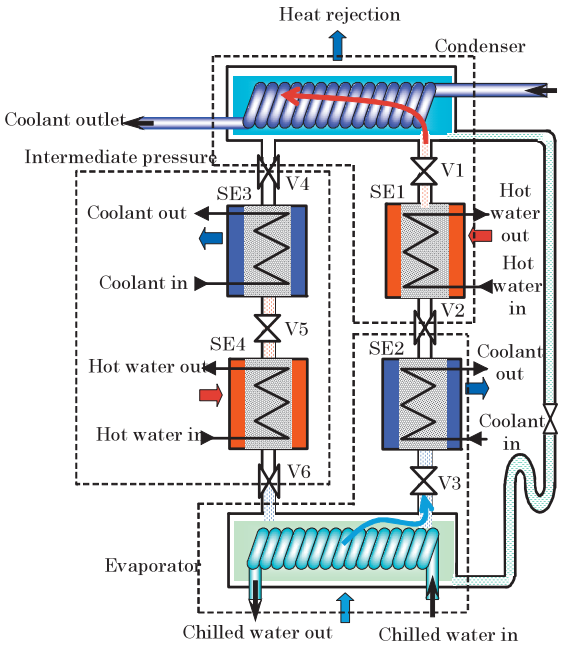

Fig. 2. Schematic diagram of the two-stage adsorption chiller.

refrigerant (ethanol) flows from SE2 to SE1 until reaching the equilibrium condition. At the equilibrium condition, the pressure of SE2 is nearly equal to that of SE1 and both are equal to an intermediate pressure between the evaporator pressure and the condenser pressure. SE3 is also in desorption mode where vapor flows to the condenser through the valve V4. The sorption element SE4 is cold by the cooling water and connected with the evaporator where the refrigerant vapor flows from the evaporator to SE4 through the valve V6 picking up the evaporation load In mode D, all valves are closed, SE1 and SE4 are in pre-heating mode where SE3 and SE4 are in pre-cooling mode. The state of each valve as well as the heat transfer fluid is shown in Table 1.

Table 1. Operation Schedule of Refrigerant Valves and Sorption Elements.

Cycle (duration)	Mode A (600 s)	Mode B (30 s)	Mode C (600 s)	Mode D (30 s)
Valves 1,3,5	Open	Closed	Closed	Closed
Valves 2,4,6	Closed	Closed	Open	Closed
SE1, SE4	Hot water	Cooling water	Cooling water	Hot water
SE2, SE3	Cooling water	Hot water	Hot water	Cooling water

3. Mathematical Model

The equations used to describe the two-stage adsorption chiller are given below;

Adsorption isotherms;[4)]

$$W = W_\circ \exp\left\{-D\left[T\ln\left(\frac{P_s}{P}\right)\right]^2\right\} \tag{1}$$

Adsorption kinetics;[7)]

$$\frac{\partial w}{\partial t} = k_s a_v (W - w) \tag{2}$$

$$k_s a_v = F_0 \frac{D_s}{R_p^2} \tag{3}$$

where,

$$D_s = D_{so} \exp\left(-\frac{E_a}{R_g T}\right) \tag{4}$$

Adsorber-desorber energy balance;

$$(Mc_P)_{eff}^{bed}\frac{dT_i^{bed}}{dt} + [mc_p]_{i-phase}\frac{dT_i^{bed}}{dt} = \phi M_{ACF}\left(\frac{dw_i^{bed}}{dt}\right)(Q_{st}) - \delta\, m_{ACF}\, C_v\left\{\gamma\left(T_i^{bed} - T_i^{evap}\right)\frac{dw}{dt} + (1-\gamma)\left(T_i^{bed} - T_v\right)\frac{dw}{dt}\right\} - (\dot{m}c_P)_j\left(T_{j,o} - T_{j,in}\right) \tag{5}$$

$$T_{j,o} = T_i^{bed} + \left(T_{j,in} - T_i^{bed}\right)\exp\left[\frac{-(UA)_i^{bed}}{(\dot{m}c_p)_j}\right] \tag{6}$$

Condenser energy balance;

$$(Mc_P)_{eff}^{cond}\frac{dT^{cond}}{dt} = \phi\left(h_v M_{acf}\frac{dw_{des}^{bed}}{dt}\right) - \frac{dm_{liq}^{va}}{dt}h_f - (\dot{m}c_P)_w\left(T_{w,o} - T_{w,in}\right) \tag{7}$$

$$T_{w,o} = T^{cond} + \left(T_{w,in} - T^{cond}\right)\exp\left[\frac{-(UA)^{cond}}{(\dot{m}c_p)_w}\right] \tag{8}$$

Evaporator energy balance;

$$\left[(Mc_p)_{eff}^{evap}\right]\frac{dT^{evap}}{dt} = -\phi h_g\left(M_{acf}\frac{dw_{ads}^{bed}}{dt}\right) + h_f\frac{dm_{liq}^{va}}{dt} - (\dot{m}c_P)_{chill}\left(T_{chill,o} - T_{chill,in}\right) \tag{9}$$

$$T_{chill,o} = T^{evap} + \left(T_{chill,in} - T^{evap}\right)\exp\left[\frac{-(UA)^{evap}}{(\dot{m}c_p)_w}\right] \tag{10}$$

Mass balance;

$$\frac{dM_{ref}}{dt} = -M_{ACF}\left[\frac{dw_{ads}^{bed}}{dt} + \frac{dw_{des}^{bed}}{dt}\right] \tag{11}$$

Cooling capacity;

$$Q_{chill} = \frac{\int_0^{t_{cycle}}\left\{(\dot{m}c_P)_{chill}\left(T_{chill,o} - T_{chill,in}\right)\right\}dt}{t_{cycle}} \tag{12}$$

Coefficient of performance (COP);

$$COP = \frac{\int_0^{t_{cycle}}(\dot{m}c_P)_{chill}\left(T_{chill,in} - T_{chill,o}\right)dt}{\int_0^{t_{cycle}}(\dot{m}c_P)_j\left(T_{j,in} - T_{j,out}\right)dt} \tag{13}$$

Where δ is either 0 or 1 depending whether the adsorbent bed is working as desorber or adsorber and, γ is 1 when the bed is connected with the evaporator and equal to 0 when it connects with another bed. The symbol Ø = 1 for operation (adsorption beds are connected to the evaporator and the condenser for adsorption and desorption) and Ø = 0 for switching (no mass transfer occurs between adsorption bed and evaporator, and desorber

Table 2. Values Adopted in the Cycle Simulation Program.

Symbols	Value	unit
W_o	0.797	$m^2 \cdot s^{-1}$
D	1.716×10^{-6}	K^{-2}
E_a	306.7×10^{3}	$J \cdot kg^{-1}$
D_{so}	1.8×10^{-12}	$Kg \cdot kg^{-1}$
R_p	6.5×10^{-6}	m
Q_{st}	1006×10^{3}	$J \cdot kg^{-1}$
M_{acf}	30	kg
$(\dot{m}c_p)_j$	3135	$W \cdot K^{-1}$
$(\dot{m}c_p)_{chill}$	2926	$W \cdot K^{-1}$
$(Mc_p)_{eff}^{bed}$	43.341×10^{3}	$J \cdot K^{-1}$
$(Mc_p)_{eff}^{cond}$	$(9341+5\times c_{pl,ethanol}(T))$	$J \cdot K^{-1}$
$(Mc_p)_{eff}^{evap}$	$(4825+80\times c_{pl,ethanol}(T)$	$J \cdot K^{-1}$
$(UA)_i^{bed}$	1476	$W \cdot K^{-1}$
$(UA)^{cond}$	15330	$W \cdot K^{-1}$
$(UA)^{evap}$	4870	$W \cdot K^{-1}$

and condenser). The fifth order Gear's Differentiation Formulae (GDF) method found in the DIVPAG subroutine of the IMSL Fortran Developer Studio software has been used to perform the computations.

For comparison with single-stage ACF/ethanol adsorption cooling cycle, as described in our earlier publications[6,7], the total amount of adsorbent in the two-stage cycle is considered to be equal to that used in the single-stage cycle. The surface area and the mass of the sorption elements of the two-stage cycle are half the values used in the single-stage adsorption cooling cycle. However, the condenser and evaporator specifications are kept same as those in the single-stage cycle. The values of these parameters are furnished in Table 2.

4. Results and Discussion

Figure 3 shows the prediction of temporal histories for the reactor beds (adsorbers or desorbers), the condenser, and the chilled water outlet using the mathematical model

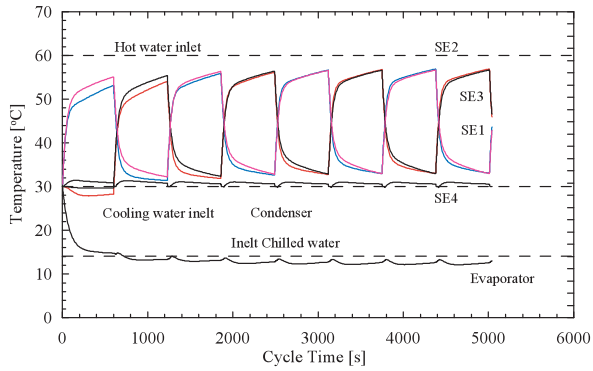

Fig. 3. Temporal profile of major components of the two-stage adsorption chiller.

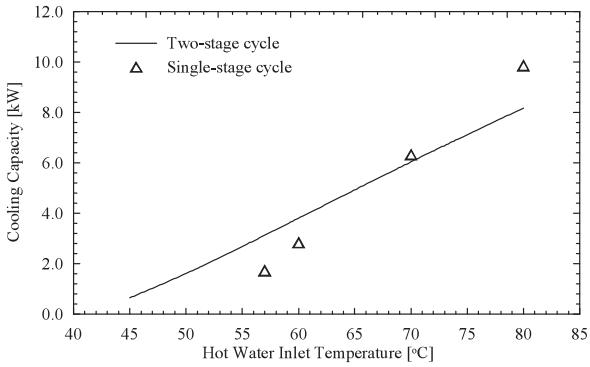

Fig. 4(a). Hot water inlet temperature effect on cooling capacity.

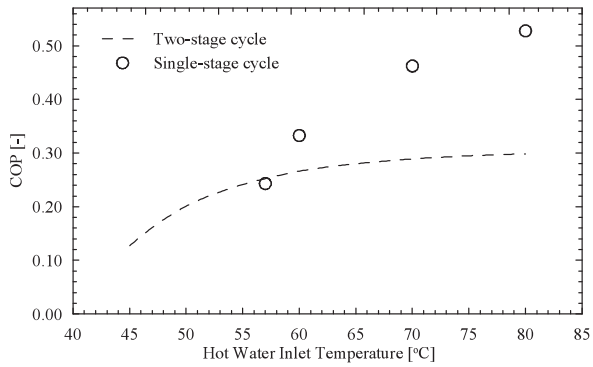

Fig. 4(b). Hot water inlet temperature effect on COP.

presented herein. Inlet temperatures of hot and cooling water are taken as 60°C and 30°C, respectively. As can be seen from Fig. 3, the two-stage chiller requires about 3000 s to reach from transient to cyclic steady state. It can also be noticed that there is no significant difference between the inlet and the outlet condenser cooling water temperatures because of the large size of the condenser compared with the mass of ethanol evaporated from the sorption element where the mass of ACF is half of that used in single-stage sorption element. Similarly, the same adsorption-

desorption cycle time is taken as 600 s, while the pre-heating or pre-cooling cycle time is taken as 30 s.

Figure 4(a) shows the effect of hot water inlet temperatures on cooling capacity for both ACF/ethanol based single-stage and two-stage cycles. With a fixed cooling water inlet temperature at 30°C for adsorber and condenser, the cooling capacity of the two-stage adsorption cooling system rises from 0.65 to 8.17 kW as the hot water inlet temperature is increased from 45 to 80°C. This is attributed to the larger concentration difference with the increase of heat source temperature. As observed in Fig. 4(a), the two stage cycles gives comparable cooling capacities when the hot water inlet temperature is between 60 and 70°C. However, when the hot water inlet temperature is less than 55°C, the two-stage cycle could still be operated, a region that could not be reached by the single-stage cycle. Figure 4(b) shows the change of COP for both single-stage and two-stage systems with the change in hot water inlet temperature. Being operated by the inlet hot water temperatures between 58 and 80°C, it is expected that the COP of the two-stage cycle is relatively lower. The superiority of two-stage cycle is again demonstrated when the inlet hot water temperature is below 55°C.

5. Conclusions

The main innovation of the ACF-ethanol based two-stage adsorption chiller is the ability of using low grade waste heat (typically between 50 and 70°C) as the driving heat source along with a constant coolant of temperature 30°C or ambient temperature. The cycle simulation study shows that the most influential parameter is the driving heat source temperature. Theoretical results show the superiority of single-stage at relatively higher heat source temperatures. However, when the hot water (heat source) inlet temperature is at or below 55°C, the two-stage cycle could still be operated, a region that could not be reached by the single-stage cycle.

Nomenclature

A	area	m^2
COP	coefficient of performance	[-]
C_p	specific heat capacity	$J \cdot kg^{-1} \cdot K^{-1}$
D	exponential constant	K^{-2}
D_{so}	pre-exponential constant	$m^2 \cdot s^{-1}$
E_a	activation energy	$J \cdot kg^{-1}$
h	enthalpy	$J \cdot kg^{-1}$
$k_s a_v$	mass transfer coefficient	s^{-1}
M	mass	kg
m	mass	kg
$\dot{m}$	mass flow rate	$kg \cdot s^{-1}$
P	pressure	Pa
P_s	saturated pressure	Pa
Q	power	W
R	gas constant	$J \cdot kg^{-1}\ K^{-1}$
R_p	fiber radius	m
T	temperature	K
t_{cycle}	cycle time	s
t	time	s
U	overall heat transfer coeff.	$W \cdot m^{-2} \cdot K^{-1}$
w	instantaneous uptake	$kg \cdot kg^{-1}$
W	equilibrium uptake	$kg \cdot kg^{-1}$
$W_\circ$	maximum uptake	$kg \cdot kg^{-1}$
Q_{st}	enthalpy of adsorption	$J \cdot kg^{-1}$
$\frac{dm_{liq}^{va}}{dt}$	mass flow rate through valve	$kg \cdot s^{-1}$
$\frac{dM_{ref}^{cond}}{dt}$	mass flow at condenser	$kg \cdot s^{-1}$
$\frac{dM_{ref}^{evap}}{dt}$	mass flow at evaporator	$kg \cdot s^{-1}$

Subscripts

ads	adsorption
chill	chill water
des	desorption
eff	effective
liq	liquid
i	adsorption or desorption
j	cooling source or heating source
w	water
f	liquid phase
g	gaseous phase
v	vapor
in	inlet
o	outlet
acf	ACF

Superscripts

bed	sorption heat exchanger
cond	condenser
evap	evaporator

Acknowledgments

This work was partly supported by the Ministry of Education, Culture, Sports, Science and Technology (MEXT), Japan, "Science and Technology Project", Project No. 18560205.

References

1) R.E. Critoph, and S.J. Metcalf, Appl. Therm. Eng, 24 (2005) 661.
2) N. Douss, and F. Meunier, *Heat Rec. Sys. and CHP*, 8 (1988) 383
3) B.B. Saha et al., ASHRAE Trans. Res., 101 (1995) 348.
4) I.I. El-Sharkawy et al., Appl. Therm. Eng., 26 (2006) 859.
5) D.C. Wang et al., Energy Conv. Mang, 47(2006) 590.
6) B.B. Saha et al., Int. J. Refrigeration, 26 (2003) 749.
7) I.I. El-Sharkawy et al., Int. J. Heat & Mass Trans., 49 (2006) 3104.